SHIMADZU
Excellence in Science

SSI-TOC-SMP-01-2024

Total Organic Carbon Analyzer

TOC-L Series

TOC-L CSH/CSN/CPH/CPN

Supplies and Maintenance Parts

Total Organic Carbon Analyzer

TOC-L Series

Supplies and Maintenance Parts

Parts listed in this catalogue are regularly stocked in the Parts Center in Japan with the following exceptions ;

1. Parts with a ☆ mark at the left end are not regularly stocked parts, which may take a while for delivery.
2. Parts with a □ mark at the left end are special order products. For delivery time, please contact a Shimadzu representative.

Contents

TOC-LCSH/CPH

Flow Line Components

Flow Diagram ····· 1
A. Syringe Pump ····· 3
B. TC Slider / Furnace ····· 4
C. IC Measurement Unit ····· 5
D. Flow Unit ····· 6
E. NDIR ····· 7

TOC-LCSN/CPN

Flow Line Components

Flow Diagram ····· 2
A. Syringe Pump ····· 3
B. TC Slider / Furnace ····· 4
C. IC Measurement Unit ····· 5
D. Flow Unit ····· 6
E. NDIR ····· 7

Control Unit ····· 8
TOC-L Consumable Parts, Maintenance Parts ····· 9
ASI-L Consumable Parts, Maintenance Parts ····· 13
OCT-L Consumable Parts ····· 17
TNM-L Consumable Parts ····· 18
SSM-5000A Consumable Parts, Maintenance Parts ····· 19
Standards ····· 22

Index

Flow Diagram

Flow Line Components

TOC-LCSH/CPH

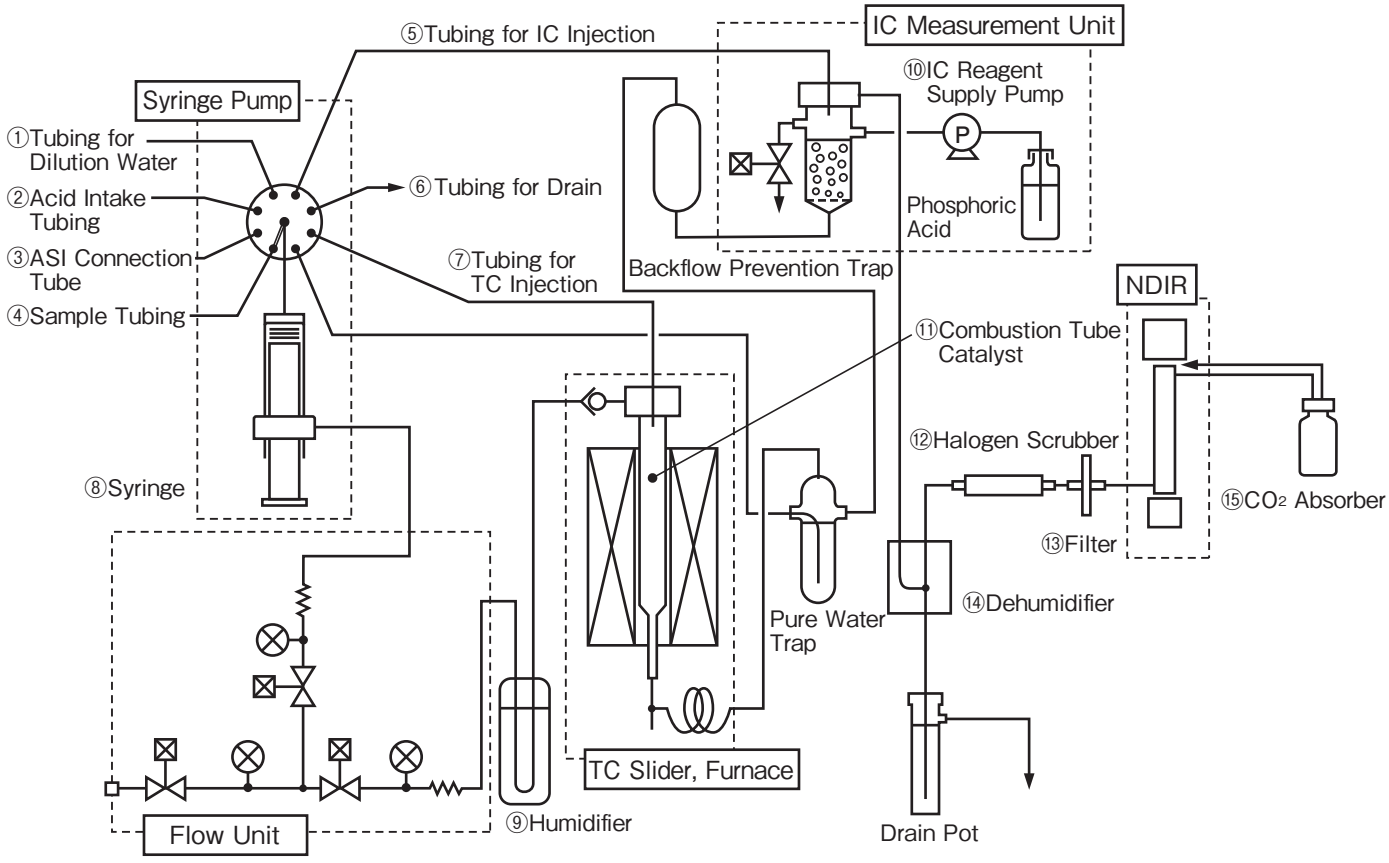

No.	Part No.	Name	No.	Part No.	Name
①	638-42119-04	Tubing, for Dilution Water	□⑨	638-53139	Humidifier
②	638-42119-03	Acid Intake Tubing	⑩	638-59389-41	Pump ASSY
③	638-42029-07	Tubing Set, 1 sampling tube with retainer and tube seal	⑪	638-41323	Combustion Tube (in case)
				638-60246-00	TOC Regular Catalyst
④	638-42119-01	Sample Tubing		630-00996-00	TOC High Sensitivity Catalyst
⑤	638-42119-05	IC Injection Tubing	⑫	630-00992	Halogen Scrubber
⑥	638-42119-06	Drain Tubing	⑬	046-00044-12	Filter
⑦	638-42119-07	TC Injection Tubing	⑭	638-59392-41	Dehumidifier Unit
⑧	638-59296	Syringe	⑮	630-00999	CO_2 Absorber

TOC-LCSN/CPN

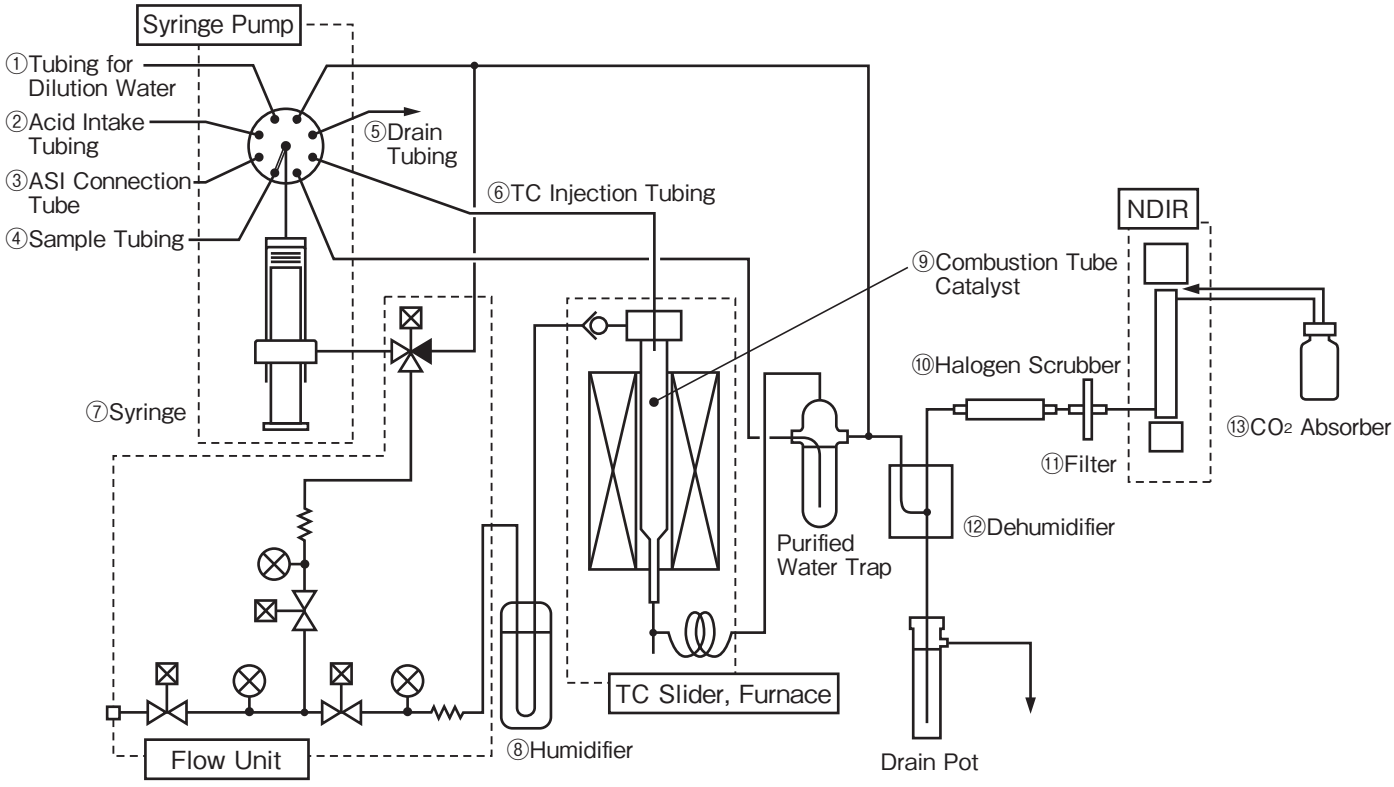

No.	Part No.	Name	No.	Part No.	Name
①	638-42119-04	Tubing, for Dilution Water	□⑧	638-53139	Humidifier
②	638-42119-03	Acid Intake Tubing	⑨	638-41323	Combustion Tube (in case)
③	638-42029-07	Tubing Set, 1 sampling tube with retainer and tube seal		638-60246-00	TOC Regular Catalyst
			⑩	630-00992	Halogen Scrubber
④	638-42119-01	Sample Tubing	⑪	046-00044-12	Filter
⑤	638-42119-06	Drain Tubing	⑫	638-59392-41	Dehumidifier Unit
⑥	638-42119-07	TC Injection Tubing	⑬	630-00999	CO_2 Absorber
⑦	638-59296	Syringe			

A
Syringe Pump

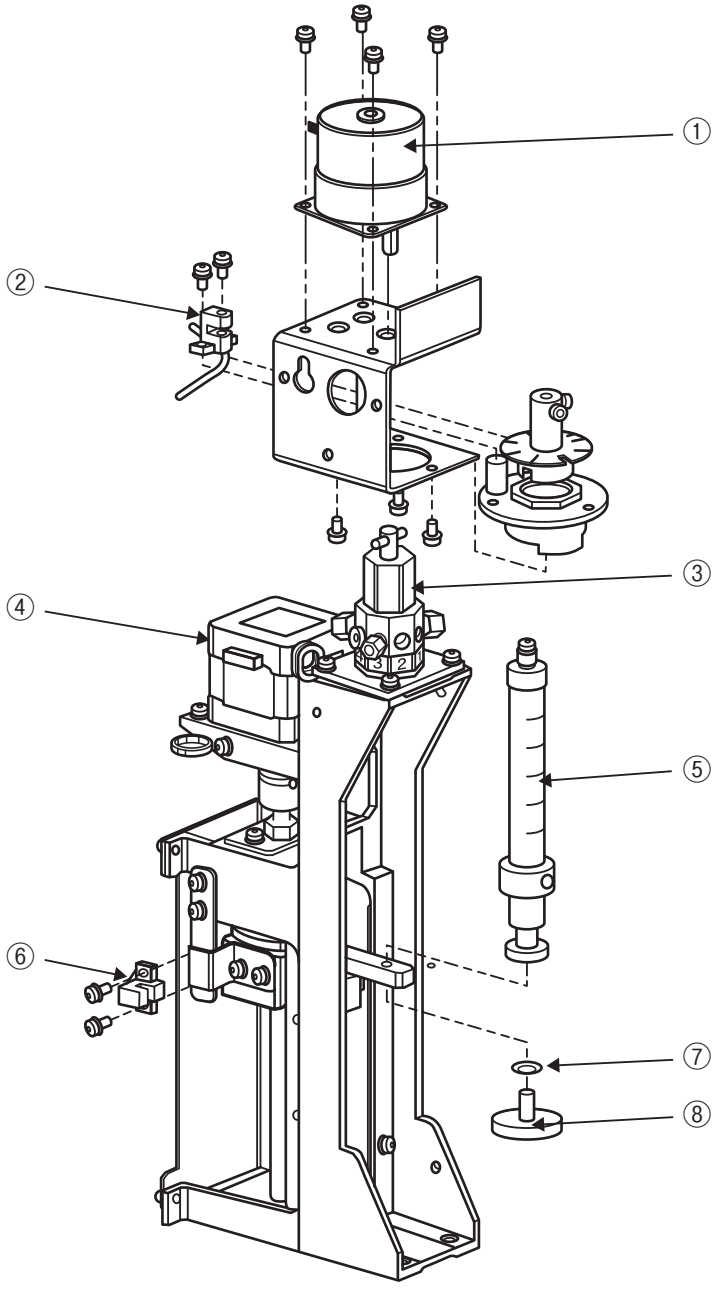

No.	Part No.	Name	No.	Part No.	Name
①	638-67070-02	Motor ASSY 8-Port Valve	⑤	638-59296	Syringe
②	638-65507-02	Photo Sensor ASSY, Valve	⑥	638-65507-01	Photo Sensor ASSY, Syringe
③	638-56251	8-Port Valve XT24-200	⑦	023-77050	Washer, SST Spring 2 M5
④	638-67079	Motor, KH42JM2B074	⑧	631-02297	Screw, Syringe Hold

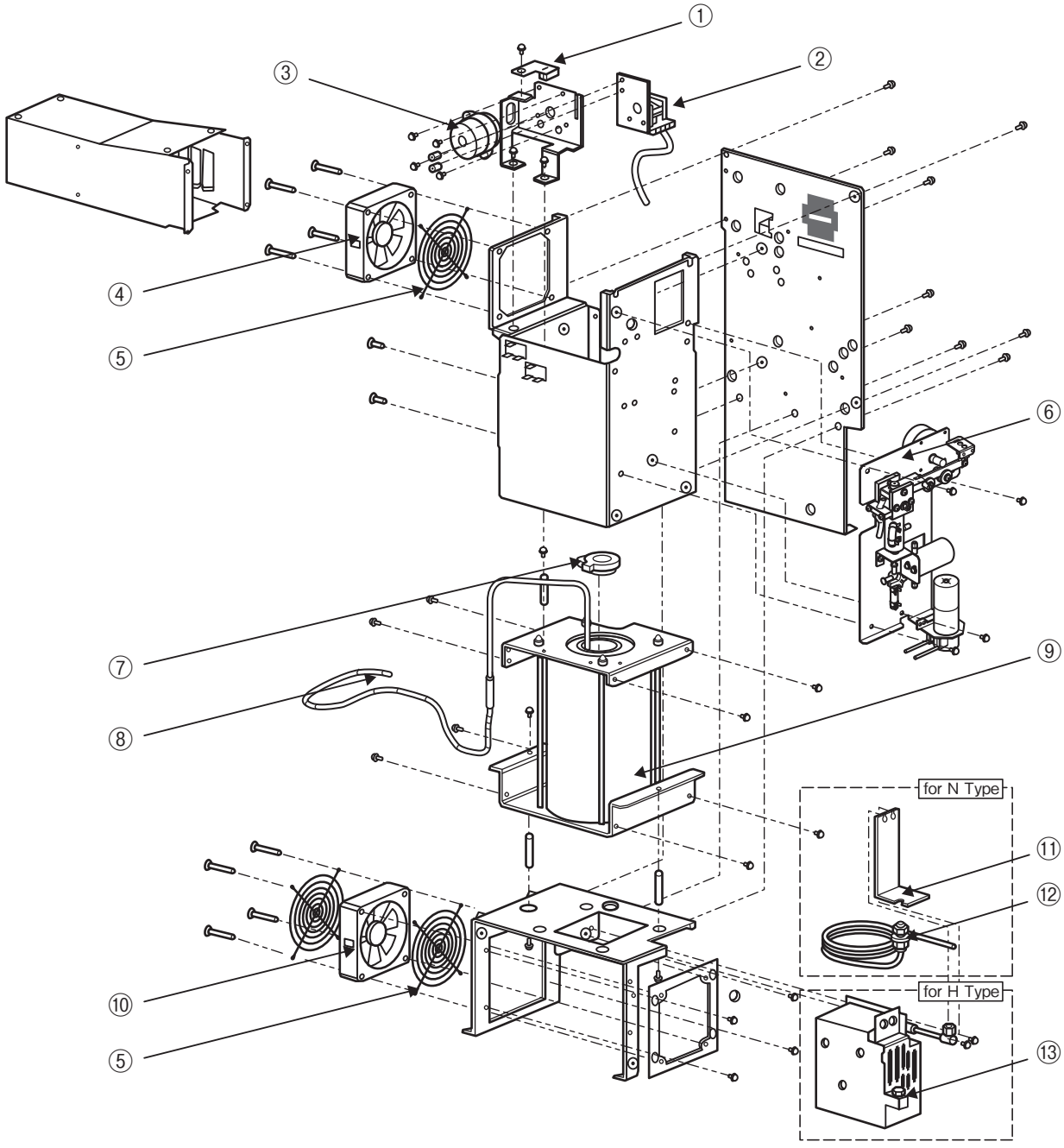

No.	Part No.	Name	No.	Part No.	Name
①	638-65506-01	Photo Sensor ASSY, Slider TC	⑧	638-65499-01	Thermocouple ASSY
□②	638-17079-04	Slide INJ TOC-L TC	□⑨	638-73263-11	Furnace, Electric, TOC-L
③	638-67052-01	Motor ASSY, Slider TC	⑩	638-59308-03	Fan ASSY, Cooling Coil
④	638-59308-01	Fan ASSY, TOC-L	□⑪	631-82337-01	Cooling Tube Bracket
☆⑤	042-60918-17	Guard, PG-36-03	□⑫	638-41583	Cooling Coil STD ASSY, L
□⑥	638-42099	IC Reactor ASSY, L	⑬	638-42100-10	Refrigerating Coil ASSY, L
⑦	631-73155	Insulator, Furnace			

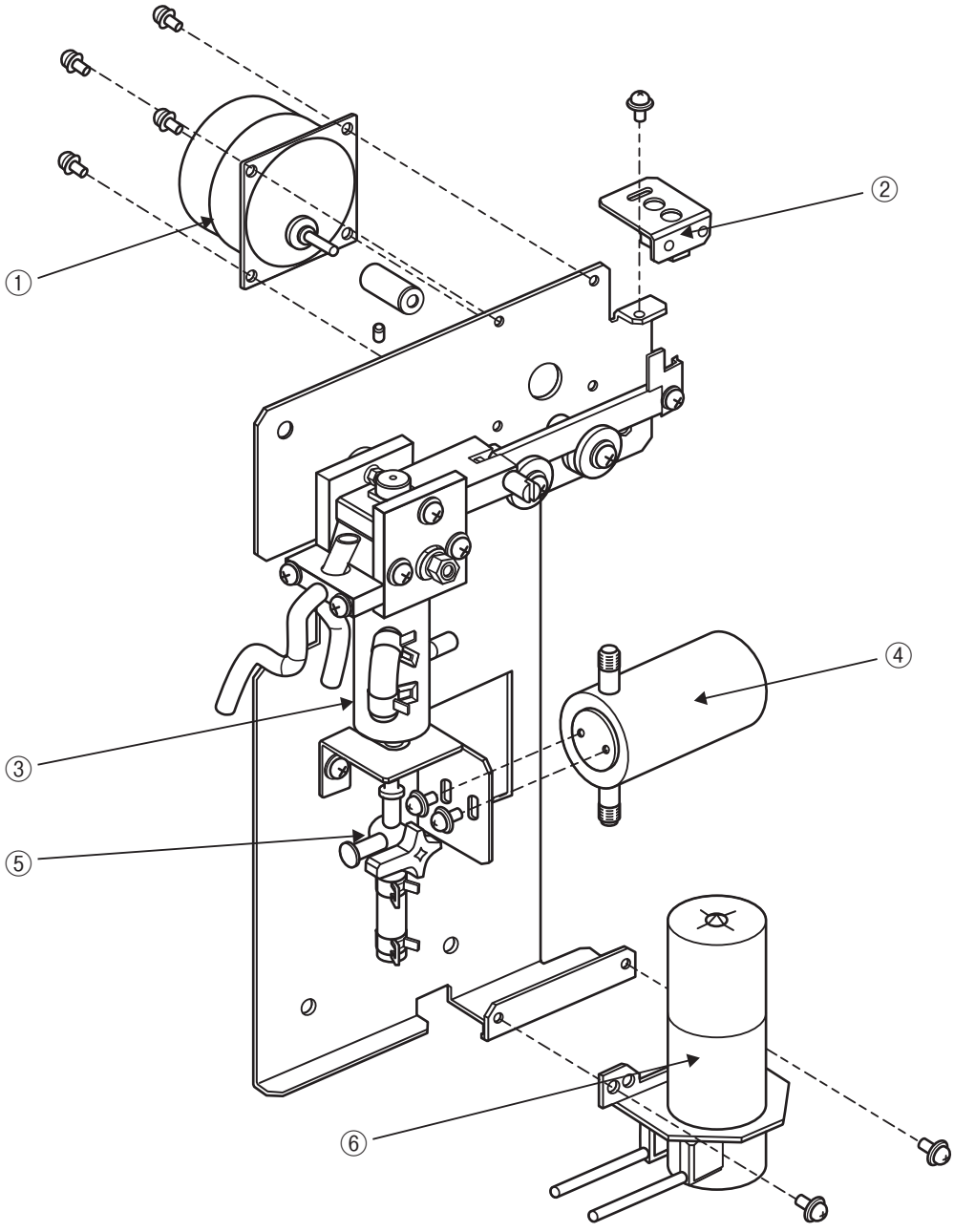

No.	Part No.	Name	No.	Part No.	Name
☆①	638-67110-02	Motor ASSY, Slider IC	□④	638-57157	Valve ASSY, IC Drain
②	638-65506-02	Photo Sensor ASSY, Slider	⑤	630-02642-03	Three-Way Cock
③	638-41263	IC Reaction Vessel	⑥	638-59389-41	Pump ASSY

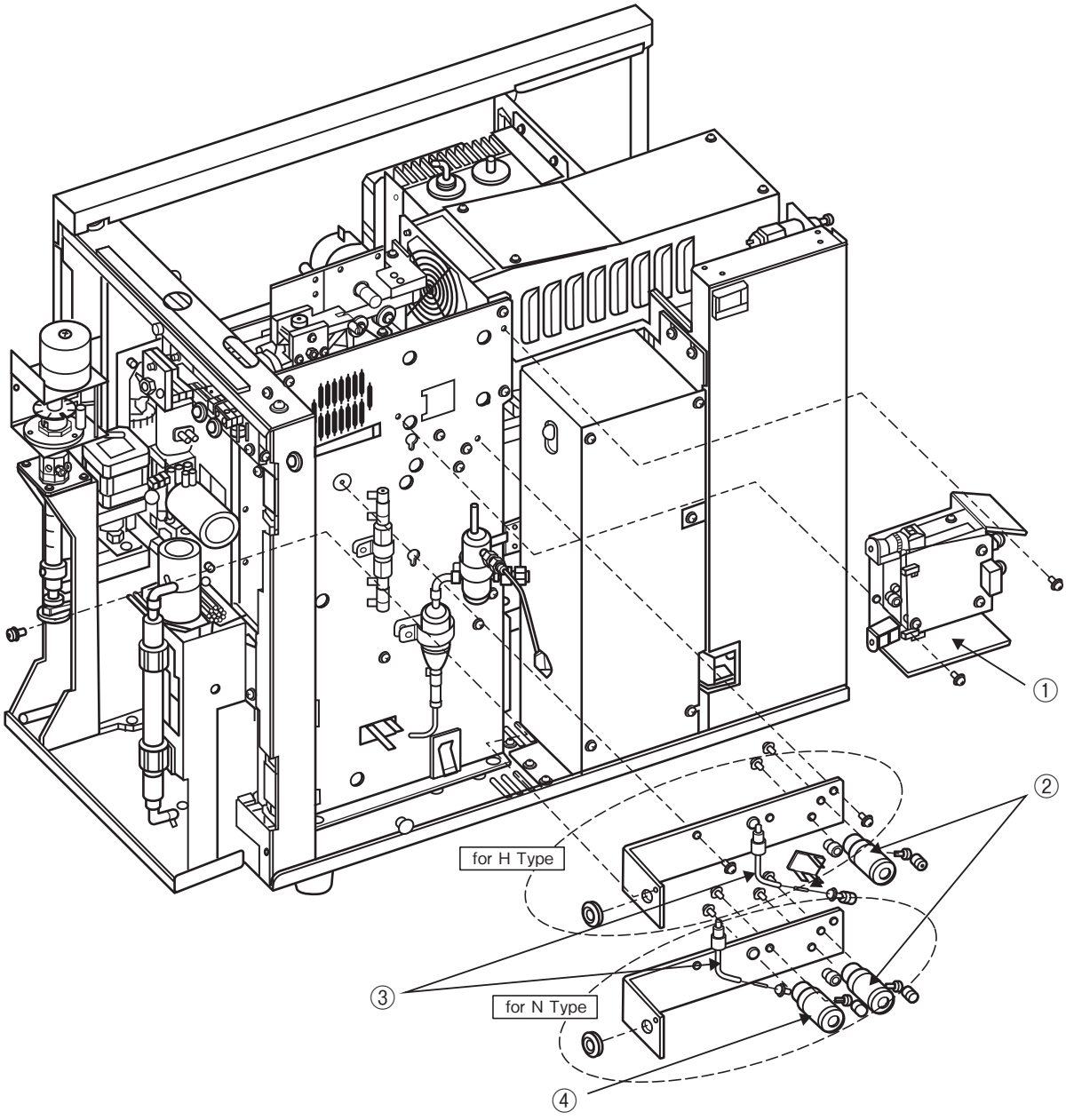

No.	Part No.	Name	No.	Part No.	Name
①	638-77184-41	Gas Block ASSY, L	③	638-41269-03	Pipe, Flare 1.6×0.5×570
②	638-57026-01	Valve, Carrier Gas	④	638-57026-02	Valve, Sparge Gas

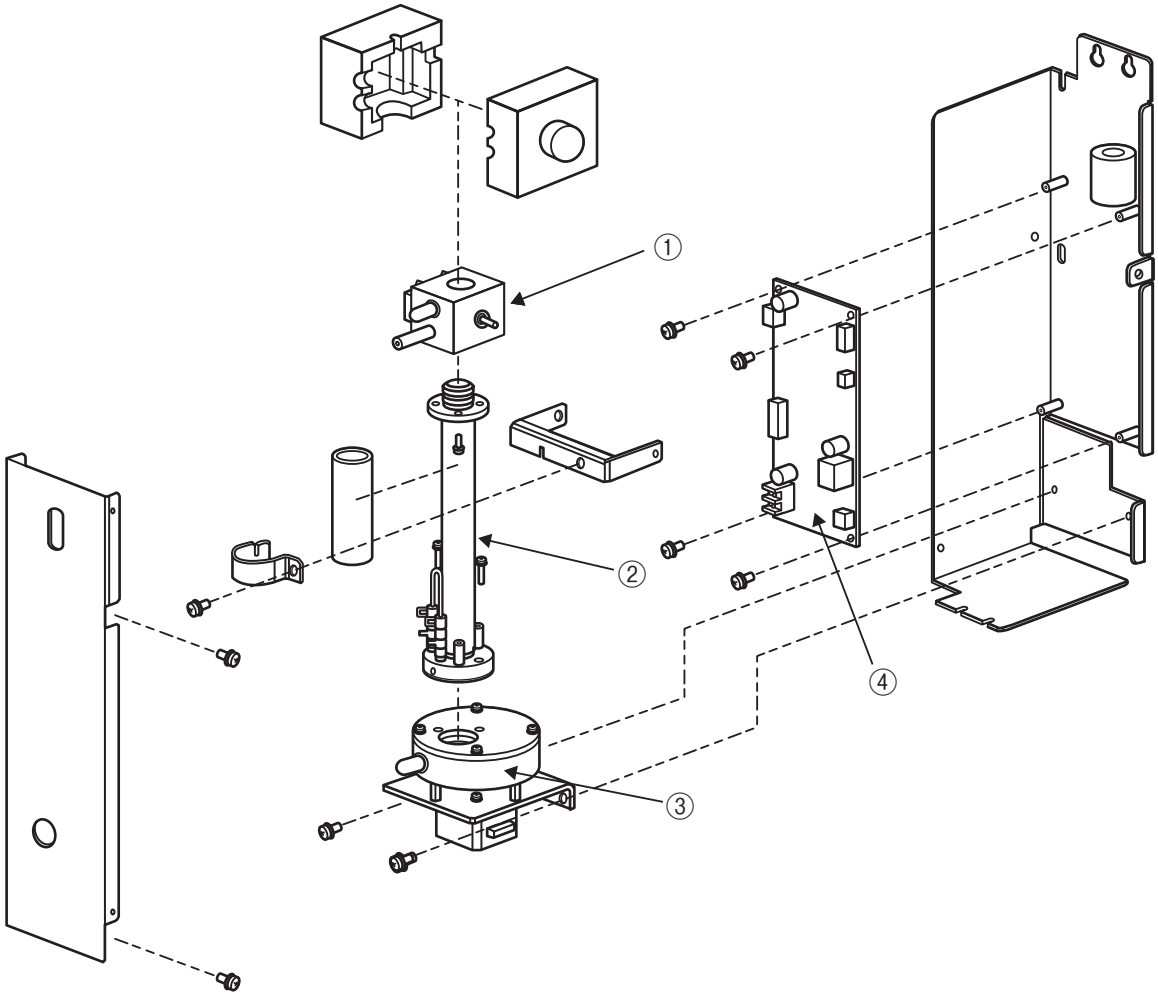

No.	Part No.	Name	No.	Part No.	Name
①	638-65600-43	Detector ASSY	③	638-65494-41	Light Souce FA
②	638-65383-02	Cell Pipe SA	④	638-79037-43	PCBA, NDIR
	638-65508-41	Entire NDIR Assembly			

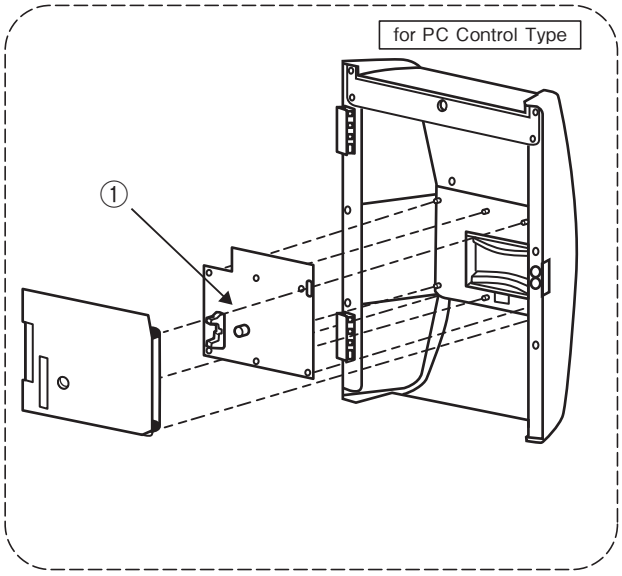

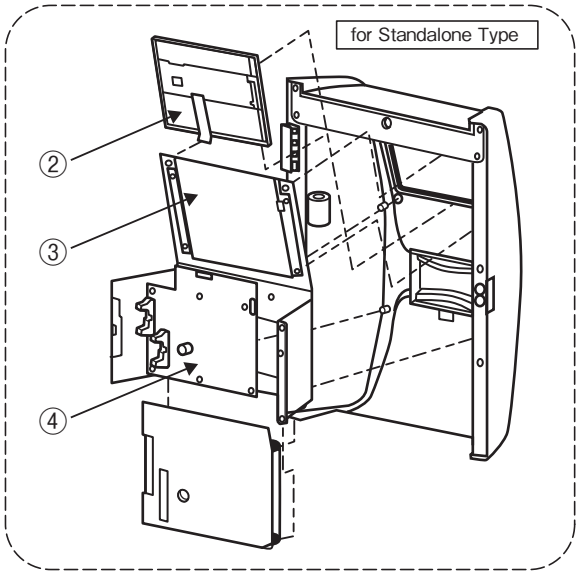

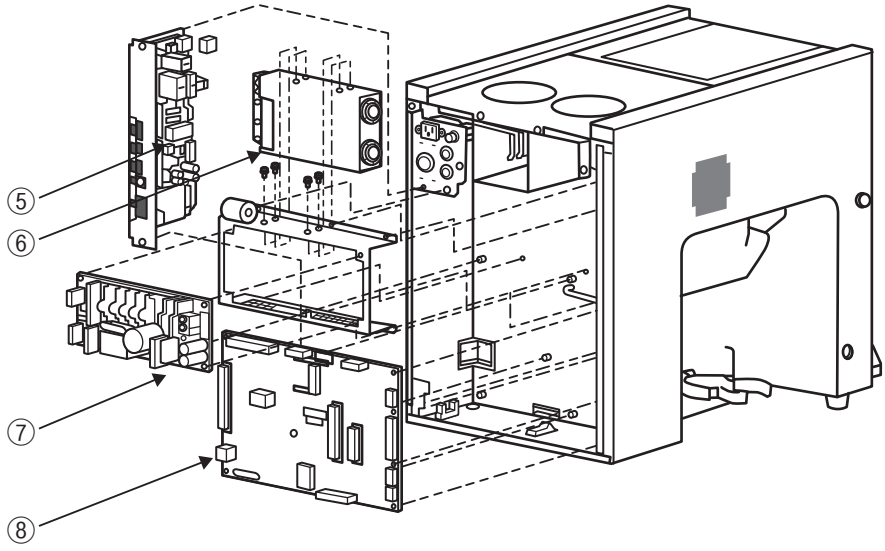

No.	Part No.	Name	No.	Part No.	Name
①	638-79060-42	PCBA, UIF L PC	⑤	638-79061-41	PCBA, POWER L
②	078-12156-01	LCD, TCG075VGLDA-G00	⑥	074-80718-66	Power Supply, PBA300F-24
③	631-70074-00	Cable, FCC TOC-L	⑦	074-80435-38	Power Supply, ZWS210PAF24/J
④	638-79060-41	PCBA, UIF L ST	⑧	638-79059-41	PCBA, MAIN L

Part No.	Name	External Appearance
035-66209-02	Elbow, 30-6RUE4-C	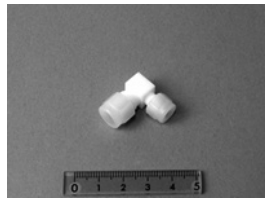
035-66243-03	Fitting, P-235	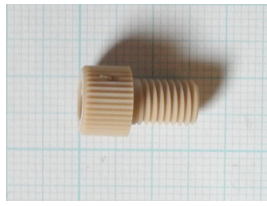
035-66243-21	Ferrule, P-200	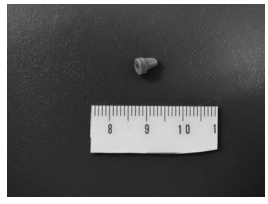
036-11209-84	O-ring, 4D P10A (for Slider, 5 pcs.)	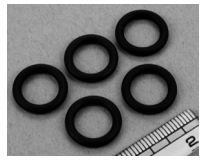
638-15025	O-ring, PTFE (for Slider, 1 pc.)	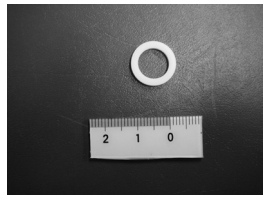
036-11352-91	O-ring, 4D P20 (for TC combution tube, 5 pcs.)	

Part No.	Name	External Appearance
036-11222-84	O-ring, 4D P22 (for IC reagent tube, 5 pcs.)	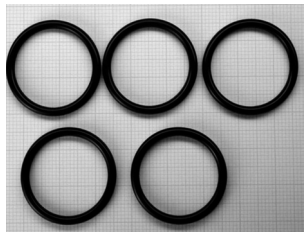
638-59390-41	IC Reaction Solution Supply Pump Head	
638-59389-41	New Replacement Kit with Pump for IC Solution	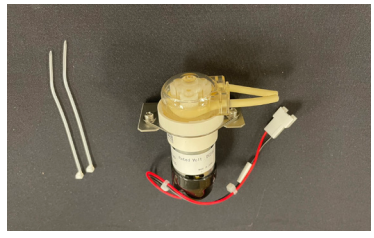
046-00042-12	Filter	
630-00105-01	Platinum Mesh (for supporting catalyst, 2 pcs.)	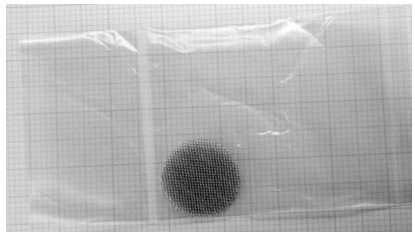
630-00557	Quartz Wool (for supporting catalyst, 1g.)	

Part No.	Name	External Appearance
638-60246-00	TOC Regular Catalyst	
630-00996-00	TOC High Sensitivity Catalyst	
638-41323	Combustion Tube (in case)	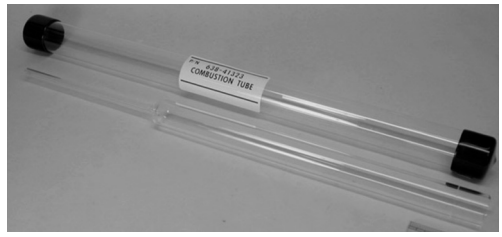
638-92380-41	Prepacked Combustion Tube with High Sensitivity Catalyst	
630-00992	Halogen Scrubber	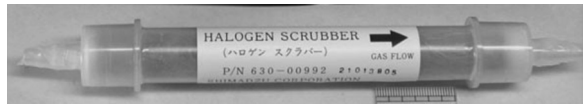
630-00999	CO_2 Absorber	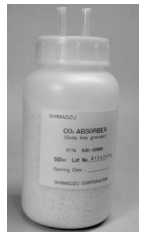
631-73155	Insulator, Furnace	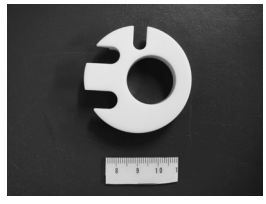

Part No.	Name	External Appearance
638-52572-03	B-Type Halogen Scrubber for TOC-LC	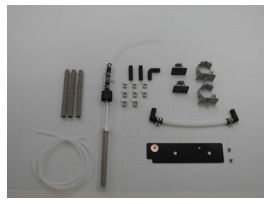
220-95365-00	SO_3 Mist Catcher Kit w/ Connectors, Clamps, & Tubing	
220-95268-01	SO_3 Mist Catcher, One Piece	
638-56251-01	8-Port Valve Rotor	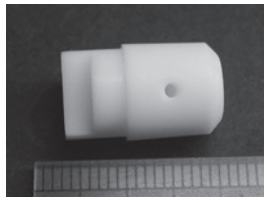
638-59296-01	Plunger Tip	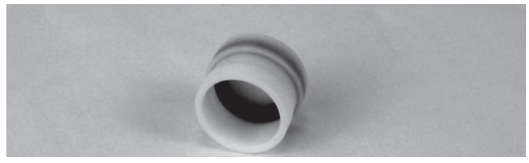
638-92464-04	Consumable Kit for TOC-LC*H, High Sensitivity Model	
638-92464-05	Consumable Kit for TOC-LC*N, Regular Sensitivity Model	
088-52859-65	USB Cable for Connecting TOC-L to Computer	

Part No.	Name	External Appearance
220-95278-00	40 ml VOA vials with cap and septum, 72 pcs.	
220-95278-01	40 ml VOA vials with cap and septum. For low level analysis, guaranteed to contain < 10 ppb TOC.	
038-00165-40	Cap, 40 mL, 200 pcs.	
038-00165-50	Septum, 40 mL, 100 pcs.	
638-41462	Vials, 24 mL, 200 pcs.	
638-20074-01	Cap, 24 mL, 100 pcs.	

Part No.	Name	External Appearance
638-43034-42	Septum, 24 mL, 100 pcs.	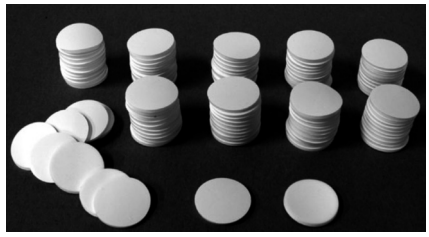
220-95316-01	24 ml vials with cap and septum, 144 pcs.	
638-53096	Vials, 9 mL, 100 pcs.	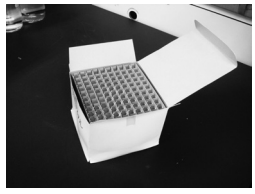
638-59390-41	Rinse Pump Head	
638-59388-41	New Replacement Kit with Pump for ASI Rinse Solution	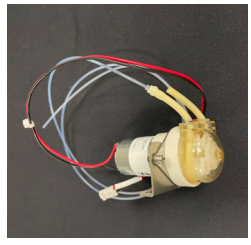
046-00617-02	Stirrer Bar (for 24 mL vials)	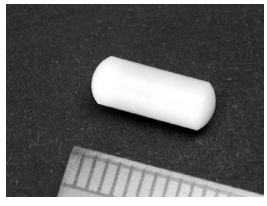
638-67095-01	Motor ASSY, Stirrer 24	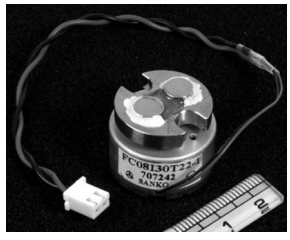

Part No.	Name	External Appearance
638-67099-41	Stirrer (for 24 mL vials)	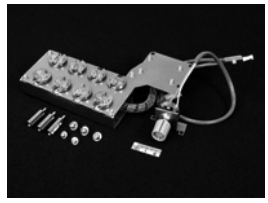
046-00617-03	Stirrer Bar (for 40 mL vials)	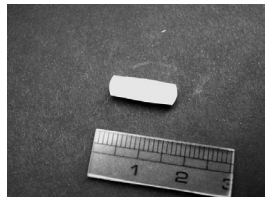
638-67095-02	Motor ASSY, Stirrer 40	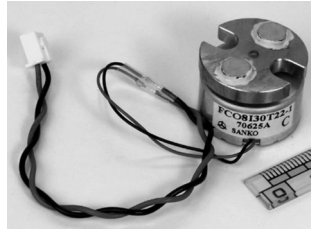
638-67100-41	Stirrer (for 40 mL vials)	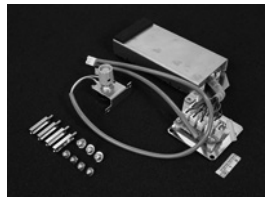
638-87149-41	ASI-L Cover Assembly, New Style with Handle	
638-87148-41	ASI-L 24 ml cover assy, TYPE B	
638-87148-42	ASI-L 9 and 40 ml cover assy, TYPE B	
638-26020-00	40 mL Vial Rack	

Part No.	Name	External Appearance
638-26021	24 ml Vial Rack	
638-26022-00	9 mL Vial Rack	
638-41472-01	Needle for Sampling and Sparging	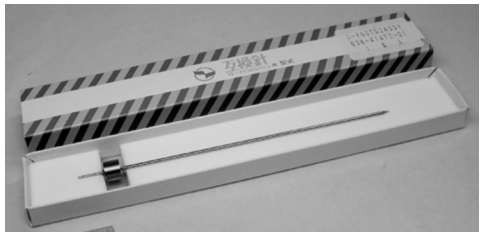
638-52337	Rinse Water Bottle	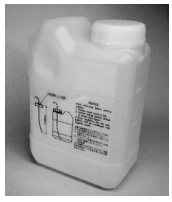

Part No.	Name	External Appearance
638-56251-01	8-Port Valve Rotor	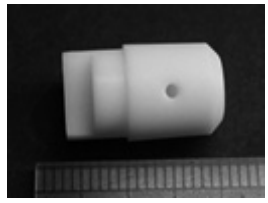
638-42119-01	OCT-L tubing, ports 1-8	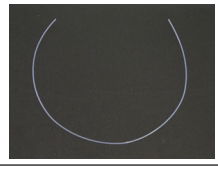
035-66243-03	Bushing P-235	
035-66243-21	Ferrule P-200	

Part No.	Name	External Appearance
631-43578	Reactor Packing	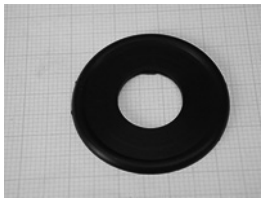
638-60074	Ceramic Fiber	
638-65232	Ozone Treatment - Catalyst	
638-65233-03	Pre-packed Ozone Killer Catalyst Tube	
638-71232-44	TNM-L/TOC-4200 Ozone Mainetnance Kit	
638-71231-41	TNM-L Ozonizer Modification Set	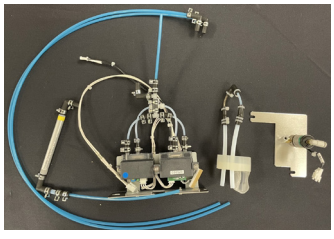

Part No.	Name	External Appearance
036-11352-93	O-ring, 4D P35, 5 pcs.	
036-11352-94	O-ring, 4D P40, 5 pcs.	
036-11404-84	O-ring, Teflon P6, 5 pcs.	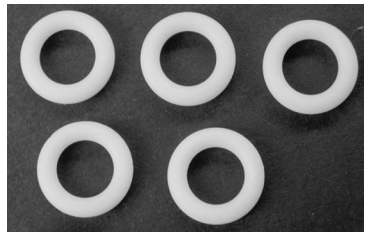
☆074-80626-12	Power Supply, Switching Regulator	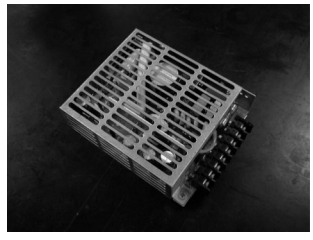
☆080-80200-01	T-Controller	
630-00557	Quartz Wool (for supporting catalyst, 1g.)	

Part No.	Name	External Appearance
638-60239-41	Cobalt Oxide Catalyst	
638-41325-01	TC Combustion Tube	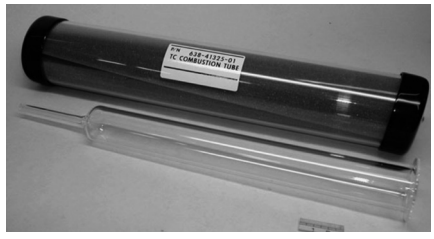
638-41325-02	IC Combustion Tube	
638-58102-84	Metal Screen for Support, 5/pk	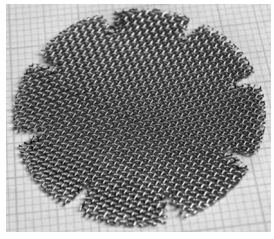
638-60074	Ceramic Fiber	

Part No.	Name	External Appearance
638-60202-01	Platinum Catalyst	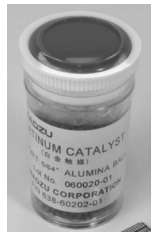
638-92099	Sample Boat Set, 100 pcs.	
630-02679-00	Sample Boat, SSM, 1 pc	
☆ 638-59143-01	Fan SSM ASSY, Cooling Coil	
☆ 638-59143-22	Fan SSM ASSY, TC Furnace	
☆ 638-59143-03	Fan SSM ASSY, TC Combtustion Tube	
☆ 638-65259-01	Thermocouple ASSY, TC Furnace	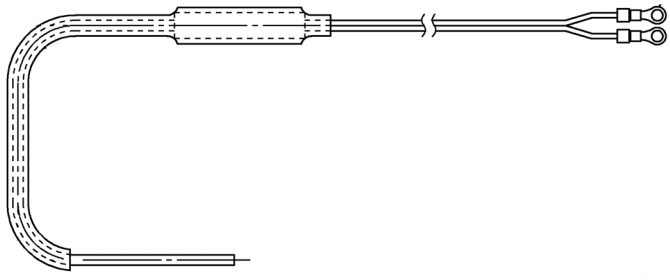
☆ 638-65259-02	Thermocouple ASSY, IC Furnace	

TOC Standards		
Part No.	Name	Remark
220-95366-73	Standards, Enviro, TOC Stds Kit 1, 40mL (0,1,5,10 ppm C)	TOC Standards - Kit 1 - Contains 0, 1, 5, & 10 ppm KHP (as C) in 0.05% HCl stored in 40 mL vials. Expiration date: 24 months.
220-95366-74	Standards, Enviro, TOC Stds Kit 1, 1L (0,1,5,10 ppm C)	TOC Standards - Kit 1 - Contains 0, 1, 5, & 10 ppm KHP (as C) in 0.05% HCl stored in 1 L bottles. Expiration date: 24 months.
220-95366-75	Standards, Enviro, TOC Stds Kit 2, 40mL (0,1,10,25,100 ppm C)	TOC Standards - Kit 2 - Contains 0, 1, 10, 25, & 100 ppm KHP (as C) in 0.05% HCl stored in 40 mL vials. Expiration date: 24 months.
220-95366-76	Standards, Enviro, TOC Stds Kit 2, 1L (0,1,10,25,100 ppm C)	TOC Standards - Kit 2 - Contains 0, 1, 10, 25, & 100 ppm KHP (as C) in 0.05% HCl stored in 1 L bottles. Expiration date: 24 months.
220-95366-77	Standards, Enviro, TOC Stds Kit 3, 40mL (0,25,50,100 ppm C)	TOC Standards - Kit 3 - Contains 0, 25, 50, & 100 ppm KHP (as C) in 0.05% HCl stored in 40 mL vials. Expiration date: 24 months.
220-95366-78	Standards, Enviro, TOC Stds Kit 3, 1L (0,25,50,100 ppm C)	TOC Standards - Kit 3 - Contains 0, 25, 50, & 100 ppm KHP (as C) in 0.05% HCl stored in 1 L bottles. Expiration date: 24 months.
220-95366-79	Standards, Enviro, TOC Stds Kit 4, 40mL (0,100,250,500 ppm C)	TOC Standards - Kit 4 - Contains 0, 100, 250, & 500 ppm KHP (as C) in 0.05% HCl stored in 40 mL vials. Expiration date: 24 months.
220-95366-80	Standards, Enviro, TOC Stds Kit 4, 1L (0,100,250,500 ppm C)	TOC Standards - Kit 4 - Contains 0, 100, 250, & 500 ppm KHP (as C) in 0.05% HCl stored in 1 L bottles. Expiration date: 24 months.
220-95366-81	Standards, Enviro, TOC Stds Kit 5, 40 mL (0,100,500,1000 ppm C)	TOC Standards - Kit 5 - Contains 0, 100, 500, & 1000 ppm KHP (as C) in 0.05% HCl stored in 40 mL vials. Expiration date: 24 months.
220-95366-82	Standards, Enviro, TOC Stds Kit 5, 1L (0,100,500,1000 ppm C)	TOC Standards - Kit 5 - Contains 0, 100, 500, & 1000 ppm KHP (as C) in 0.05% HCl stored in 1 L bottles. Expiration date: 24 months.
220-95366-83	Standards, Enviro, TOC Stds Kit 6, 40 mL (0,1,2,30 ppm C)	TOC Standards - Kit 6 - Contains 0, 1, 2, & 30 ppm KHP (as C) in 0.05% HCl stored in 40 mL vials. Expiration date: 24 months.
220-95366-84	Standards, Enviro, TOC Stds Kit 6, 1L (0,1,2,30 ppm C)	TOC Standards - Kit 6 - Contains 0, 1, 2, & 30 ppm KHP (as C) in 0.05% HCl stored in 1 L bottles. Expiration date: 24 months.

USP Standards		
Part No.	Name	Remark
220-95282-00	Reagents, Enviro, USP SST KIT FOR TOC Combustion Systems, 1 SET.	USP SST KIT FOR TOC-VC and TOC-LC, 1 SET. Consists of three 40mL vials, including Reagent Water (RW), 500 ppb Sucrose (Rs) and 500 ppb 1.4- Benzoquinone (RSS) preserved with hydrochloric acid.
220-95283-00	Reagents, Enviro, USP SST KIT FOR TOC Combustion Systems, 4 SETS	USP SST KIT FOR TOC-VC and TOC-LC, 4 SETS. Consists of four vials each of Reagent Water, 500 ppb Sucrose, and 1.4 Benzoquinone in 40 mL vials preserved with hydrochloric acid. Standards are USP Traceable.

TOC Water		
Part No.	Name	Remark
220-95236-01	Solvents, Enviro, WATER,TOC CERTIFIED LITER, GUAR<100 ppb	Total Carbon guaranteed below 100 ppb. 1x 1 L bottle. Meets USP 23, EPA 415.1, EPA 9060A, Standard Methods 5310B, ASTM 02579, AOAC 973.47.Meets USP 23, EPA 415.1, EPA 9060A, Standard Methods 5310B, ASTM 02579, AOAC 973.47.
220-95236-02	Solvents, Enviro, WATER FOR TOC (6 L BOTTLES/CASE)	Total Carbon guaranteed below 100 ppb. 6x 1 L bottle. Meets USP 23, EPA 415.1, EPA 9060A, Standard Methods 5310B, ASTM 02579, AOAC 973.47.Meets USP 23, EPA 415.1, EPA 9060A, Standard Methods 5310B, ASTM 02579, AOAC 973.47.

Reagents		
Part No.	Name	Remark
220-95281-53	Phosphoric Acid, H_3PO_4 (500 mL) W/ Certificate	Reagents, Enviro, Phosphoric Acid, H_3PO_4 (500 mL) W/ Certificate. ACS reagent, 85 wt. % in H_2O.
220-95281-23	Sodium Bicarbonate, $NaHCO_3$ (500 G) W/ Certificate	Sodium bicarbonate (500g) w/certificate. ACS reagent, ≥99.7%.
220-95281-52	Hydrochloric Acid, HCl (100 mL) W/ Certificate	Hydrochloric acid, HCl (100 mL) W/ Certificate. ACS Grade. 37%. Acid requires dilution for use with TOC.
220-95281-01	Potassium Hydrogen Phthalate, KHP (100 G) W/ Certificate	100 grams of 99.95% Potassium Hydrogen Phathalate with Certificate of Analysis. BioXtra, ≥99.95%.
220-95281-26	Sodium Carbonate, Na_2CO_3 (500 G) W/ Certificate	Sodium Carbonate, Na_2CO_3 (500 G) W/ Certificate. ACS reagent, ≥99.5%
220-95281-18	Glucose, $C_6H_{12}O_6$ (25 G) W/ Certificate	Glucose, 25G of ACS Reagent Grade
220-95281-60	Potassium Nitrate, KNO_3 (500 G) W/ Certificate	Potassium Nitrate, KNO_3, ACS reagent, 99% purity, 500g

INDEX

Name	Page	P/N
8-Port Valve Rotor	12, 17	638-56251-01
8-Port Valve XT24-200	3	638-56251
Acid Intake Tubing	1, 2	638-42119-03
ASI-L Cover Assembly, New Style with Handle	15	638-87149-41
ASI-L 24 ml cover assy, TYPE B	15	638-87148-41
ASI-L 9 and 40 ml cover assy, TYPE B	15	638-87148-42
B-Type Halogen Scrubber for TOC-LC	12	638-52572-03
Bushing P-235	17	035-66243-03
Cable, FCC TOC-L	8	631-70074-00
Cap, 24 mL, 200 pcs.	13	638-20074-01
Cap, 40 mL, 200 pcs.	13	038-00165-40
Cell Pipe SA	7	638-65383-02
Ceramic Fiber	18, 20	638-60074
CO_2 Absorber	1, 2, 11	630-00999
Cobalt Oxide Catalyst	20	638-60239-41
Combustion Tube (in case)	1, 2, 11	638-41323
Consumable Kit for TOC-LC*H, High Sensitivity Model	12	638-92464-04
Consumable Kit for TOC-LC*N, Regular Sensitivity Model	12	638-92464-05
Cooling Coil STD ASSY, L	4	☐ 638-41583
Cooling Tube Bracket	4	☐ 631-82337-01
Dehumidifier Unit	1, 2	638-59392-41
Detector ASSY	7	638-65600-43
Drain Tubing	1, 2	638-42119-06
Elbow, 30-6RUE4-C	9	035-66209-02
Fan ASSY, Cooling Coil	4	638-59308-03
Fan ASSY, TOC-L	4	638-59308-01
Fan SSM ASSY, Cooling Coil	21	☆ 638-59143-01
Fan SSM ASSY, TC Combtustion Tube	21	☆ 638-59143-03
Fan SSM ASSY, TC Furnace	21	☆ 638-59143-22
Ferrule P-200	9, 17	035-66243-21
Filter	1, 2, 10	046-00042-12
Fitting, P-235	9	035-66243-03
Furnace, Electric, TOC-L	4	☐ 638-73263-11
Gas Block ASSY, L	6	638-77184-41
Guard, PG-36-03	4	☆ 042-60918-17
Halogen Scrubber	1, 2, 11	630-00992
Humidifier	1, 2	☐ 638-53139
IC Combustion Tube	20	638-41325-02
IC Injection Tubing	1	638-42119-05
IC Pump ASSY	1, 5	638-59389-41
IC Reaction Solution Supply Pump Head	10	638-59390-41
IC Reaction Vessel	5	638-41263
IC Reactor ASSY, L	4	☐ 638-42099
Insulator, Furnace	4, 11	631-73155
LCD, TCG075VGLDA-G00	8	078-12156-01
Light Souce FA	7	638-65494-41
Metal Screen for Support, 5/pk	20	638-58102-84
Motor ASSY 8-Port Valve	3	638-67070-02
Motor ASSY, Slider IC	5	☆ 638-67110-02

Name	Page	P/N
Motor ASSY, Slider TC	4	638-67052-01
Motor ASSY, Stirrer 24	14	638-67095-01
Motor ASSY, Stirrer 40	15	638-67095-02
Motor, KH42JM2B074	3	638-67079
NDIR Assembly	7	638-65508-41
Needle for Sampling and Sparging	16	638-41472-01
New Replacement Kit with Pump for ASI Rinse Solution	14	638-59388-41
New Replacement Kit with Pump for IC Solution	10	638-59389-41
O-ring, 4D P10A (for Slider, 5 pcs.)	9	036-11209-84
O-ring, 4D P20 (for TC combution tube, 5 pcs.)	9	036-11352-91
O-ring, 4D P22 (for IC reagent tube, 5 pcs.)	10	036-11222-84
O-ring, 4D P35, 5 pcs.	19	036-11352-93
O-ring, 4D P40, 5 pcs.	19	036-11352-94
O-ring, PTFE (for Slider, 1 pc.)	9	638-15025
O-ring, Teflon P6, 5 pcs.	19	036-11404-84
OCT-L tubing, ports 1-8	17	638-42119-01
Ozone Treatment - Catalyst	18	638-65232
PCBA, MAIN L	8	638-79059-41
PCBA, NDIR	7	638-79037-43
PCBA, POWER L	8	638-79061-41
PCBA, UIF L PC	8	638-79060-42
PCBA, UIF L ST	8	638-79060-41
Photo Sensor ASSY, Slider	5	638-65506-02
Photo Sensor ASSY, Slider TC	4	638-65506-01
Photo Sensor ASSY, Syringe	3	638-65507-01
Photo Sensor ASSY, Valve	3	638-65507-02
Pipe, Flare 1.6×0.5×570	6	638-41269-03
Platinum Catalyst	21	638-60202-01
Platinum Mesh (for supporting catalyst, 2 pcs.)	10	630-00105-01
Plunger Tip	12	638-59296-01
Power Supply, PBA300F-24	8	074-80718-66
Power Supply, Switching Regulator	19	☆ 074-80626-12
Power Supply, ZWS210PAF24/J	8	074-80435-38
Prepack Combustion Tube with High Sensitivity Catalyst	11	638-92380-41
Pre-packed Ozone Killer Catalyst Tube	18	638-65233-03
Quartz Wool (for supporting catalyst, 1g.)	10, 19	630-00557
Reactor Packing	18	631-43578
Refrigerating Coil ASSY, L	4	638-42100-10
Rinse Pump Head	14	638-59390-41
Rinse Water Bottle	16	638-52337
Sample Boat Set, 100 pcs.	21	638-92099
Sample Boat, SSM, 1 pc	21	630-02679-00
Sample Tubing	1, 2	638-42119-01
Screw, Syringe Hold	3	631-02297
Septum, 24 mL, 100 pcs.	14	638-43034-42
Septum, 40 mL, 100 pcs.	13	038-00165-50
Slide INJ TOC-L TC	4	□ 638-17079-04
SO_3 Mist Catcher Kit w/ Connectors, Clamps, & Tubing	12	220-95365-00
SO_3 Mist Catcher, One Piece	12	220-95268-01

Name	Page	P/N
Standards, TOC	22	
Standards, USP	22	
Standards, TOC Water	23	
Standards, Reagents	23	
Stirrer (for 40 mL vials)	15	638-67100-41
Stirrer Bar (for 24 mL vials)	14	046-00617-02
Stirrer Bar (for 40 mL vials)	15	046-00617-03
Stirrer (for 24 mL vials)	15	638-67099-41
Syringe	1, 2, 3	638-59296
TC Combustion Tube	20	638-41325-01
TC Injection Tubing	1, 2	638-42119-07
T-Controller	19	☆ 080-80200-01
Thermocouple ASSY	4	638-65499-01
Thermocouple ASSY, IC Furnace	21	☆ 638-65259-02
Thermocouple ASSY, TC Furnace	21	☆ 638-65259-01
Three-Way Cock	5	630-02642-03
TNM-L Ozonizer Modification Set	18	638-71231-41
TNM-L/TOC-4200 Ozone Maintenance Kit	18	638-71232-44
TOC High Sensitivity Catalyst	1, 11	630-00996-00
TOC Regular Catalyst	1, 2, 11	638-60246-00
Tubing Set, 1 sampling tube with retainer and tube seal	1, 2	638-42029-07
Tubing, for Dilution Water	1, 2	638-42119-04
USB Cable for Connecting TOC-L to Computer	12	088-52859-65
Valve ASSY, IC Drain	5	□ 638-57157
Valve, Carrier Gas	6	638-57026-01
Valve, Sparge Gas	6	638-57026-02
Vial Rack, 9 mL	16	638-26022-00
Vial Rack, 24 mL	16	638-26021
Vial Rack, 40 mL	15	638-26020-00
Vials, 24 mL, 100 pcs.	13	638-41462
Vials, 24 ml, with cap and septum, 144 pcs.	14	220-95316-01
Vials, 40 mL, VOA, with cap and septum, 72 pcs	13	220-95278-00
Vials, 40 ml, VOA with cap and septum; low level analysis, guaranteed to contain < 10 ppb TOC	13	220-95278-01
Vials, 9 mL, 100 pcs.	14	638-53096
Washer, SST Spring 2 M5	3	023-77050

Notice

- This publication may not be reproduced in whole or in part without the express written permission of Shimadzu Corporation.
- Since Shimadzu products are frequently upgraded and improved, information in this document is subject to change without notice.
- This document has been carefully produced. However, if any errors or omissions discovered, please understand that they may not be immediately correctable.

Shimadzu Corporation
www.shimadzu.com/an/

Shimadzu Scientific Instruments
7102 Riverwood Drive, Columbia, Maryland 21046, U.S.A.
Phone: 800-477-1227/410-381-1227, Fax: 410-381-1222
www.ssi.shimadzu.com

For Research Use Only. Not for use in diagnostic procedures.
This publication may contain references to products that are not available in your country. Please contact us to check the availability of these products in your country.
Company names, products/service names and logos used in this publication are trademarks and trade names of Shimadzu Corporation, its subsidiaries or its affiliates, whether or not they are used with trademark symbol "TM" or "®".
Third-party trademarks and trade names may be used in this publication to refer to either the entities or their products/services, whether or not they are used with trademark symbol "TM" or "®".
Shimadzu disclaims any proprietary interest in trademarks and trade names other than its own.

The contents of this publication are provided to you "as is" without warranty of any kind, and are subject to change without notice. Shimadzu does not assume any responsibility or liability for any damage, whether direct or indirect, relating to the use of this publication.

© Shimadzu Corporation 2024
© Shimadzu Scientific Instruments 2024