IF450plus

The incubator I is perfect for the world of research, medicine, pharmaceutics and food analytics, as well as food chemistry.

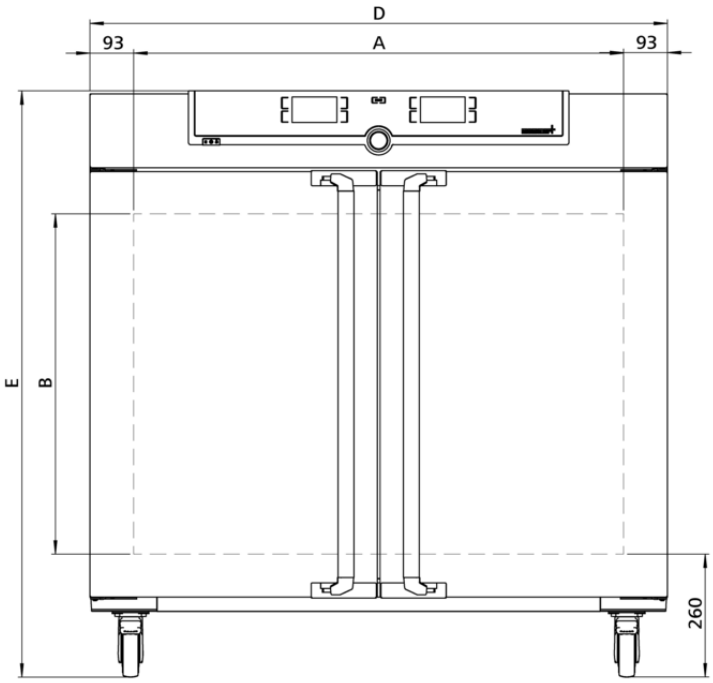

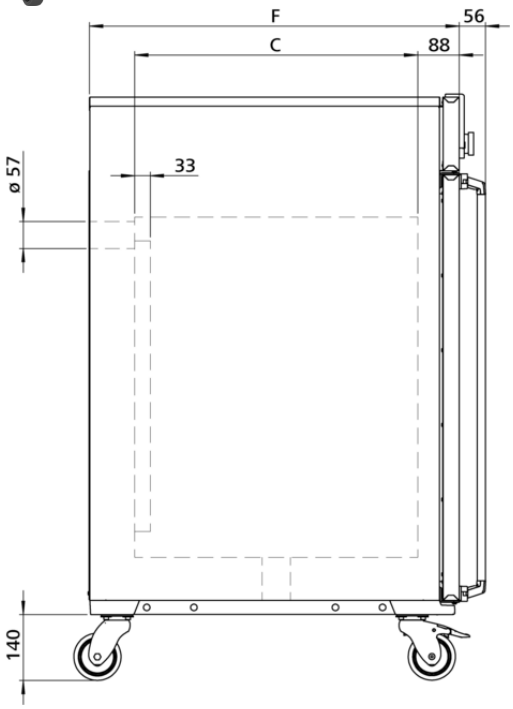

Memmert GmbH + Co. KG | Tel. +49 (0) 9122/925-0 | E-Mail info@memmert.com

Temperature

Setting temperature range	+20 to +80 °C
Working temperature range	min. 10°C above ambient up to +80°C
Setting accuracy temperature	0.1 °C
Temperature sensor	2 Pt100 sensors DIN Class A in 4-wire-circuit for mutual monitoring, taking over functions in case of an error

Control technology

ControlCOCKPIT	TwinDISPLAY. Adaptive multifunctional digital PID-microprocessor controller with 2 high-definition TFT-colour displays.
Timer	Digital backwards counter with target time setting, adjustable from 1 minute to 99 days
Function HeatBALANCE	adapting the distribution of the heating performance of the upper and lower heating circuit from -50 % to +50 %
Function SetpointWAIT	the process time does not start until the set temperature is reached
Calibration	three freely selectable temperature values
adjustable parameters	temperature (Celsius or Fahrenheit), fan speed, air flap position, programme time, time zones, summertime/wintertime
Sterilisation	fixed sterilisation programme (4 hours/160°C) for sterilisation of working chamber, not for sterilising the load

Ventilation

Fan	forced air circulation by quite air turbine, adjustable in 10 % steps for each segment individually
Fresh air	Admixture of pre-heated fresh air by electronically adjustable air flap
Vent	vent connection with restrictor flap

Communication

Documentation	programme stored in case of power failure
Programming	AtmoCONTROL software on a USB stick for programming, managing and transferring programmes via Ethernet interface or USB port

Safety

Temperature control	mechanical temperature limiter TB, protection class 1 according to DIN 12880 to switch off the heating approx. 20°C above nominal temperature
Temperature control	overtemperature monitor TWW, protection class 3.1 or adjustable temperature limiter TWB, protection class 2, selectable on display
AutoSAFETY	additionally integrated over- and undertemperature monitor "ASF", automatically following the setpoint value at a preset tolerance range, alarm in case of over- or undertemperature, heating is switched off in case of overtemperature
Autodiagnostic system	for fault analysis
Alarm	visual and acoustic

Standard equipment

Works calibration certificate	incl. works calibration certificate for +37°C
Door	inner glass doors
Door	fully insulated stainless steel doors with2-point locking (compression door lock)
Internals	2 stainless steel grid(s), electropolished

Stainless steel interior

Dimensions	$w_{(A)}$ x $h_{(B)}$ x $d_{(C)}$: 1040 x 720 x 600 mm (d less 39 mm for fan)
Interior	easy-to-clean interior,made of stainless steel, reinforced by deep drawn ribbing with integrated and protected large-area heating on four sides
Volume	449 l
Max. number of internals	8
Max. loading of chamber	300 kg
Max. loading per internal	30 kg

Textured stainless steel casing

Dimensions	$w_{(D)}$ x $h_{(E)}$ x $d_{(F)}$: 1224 x 1247 x 784 mm (d +56mm door handle)
Installation	on lockable castors
Housing	rear zinc-plated steel

Electrical data

Voltage **Electrical load**	230 V, 50/60 Hz approx. 1800 W
Voltage **Electrical load**	115 V, 50/60 Hz approx. 1500 W

Ambient conditions

Set Up	The distance between the wall and the rear of the appliance must be at least 15 cm. The clearance from the ceiling must not be less than 20 cm and the side clearance from walls or nearby appliances must not be less than 5 cm.
Altitude of installation	max. 2,000 m above sea level
Ambient temperature	+5 °C to +40 °C
Humidity rh	max. 80 %, non-condensing
Overvoltage category	II
Pollution degree	2

Packing/shipping data

Transport information	The appliances must be transported upright
Customs tariff number	8419 8998
Country of origin	Federal Republic of Germany
WEEE-Reg.-No.	DE 66812464
Dimensions approx incl. carton	w x h x d: 1330 x 1440 x 1050 mm
Net weight	approx. 161 kg
Gross weight carton	approx. 227 kg

Standard units are safety-approved and bear the test marks