Agilent Technologies

Agilent 1100 LC/MSD Replacement Parts

Last Update: April 27, 2006

Item	Description	Part Number
	Electrospray Spray Chamber	**G1948A**
1	Electrospray spray chamber cover	G1946-40033
2	Spray chamber window	G1946-20159
3	Nebulizer cover	G1946-40034
4	Mesh electrode	G1946-60027
5	ES Nebulizer assembly	G1946-60098
6	Screw, M3 x 0.5 x 8 T10 (also attaches nebulizer spacer for G1946D)	0515-0372
	Magnet, actuator	0490-2320
7	Screw, M4 x 16	0515-1034
8	Latch post	G1946-20196
	Screw, M4 x 0.7 PH	0515-0380
	Screw, M4 x 0.7 x 12 FH	0515-2556
	Screw, M3 x 0.5 FH	0515-1103
	Shoulder screw, metric (attaches nebulizer to spray chamber)	0515-2880
	Spray chamber window gasket	G1946-20189
	Spray chamber window clamp	G1946-20188
	Screw to hold latch post	0515-1034
	Vented standoff for electrode	G1946-20163
	Spray chamber body, teflon coated, electrospray	G1946-20242
	O-ring, spray chamber	0905-1464
	Nebulizer spacer (for G1946D/G1956B electrospray source)	G1946-20307

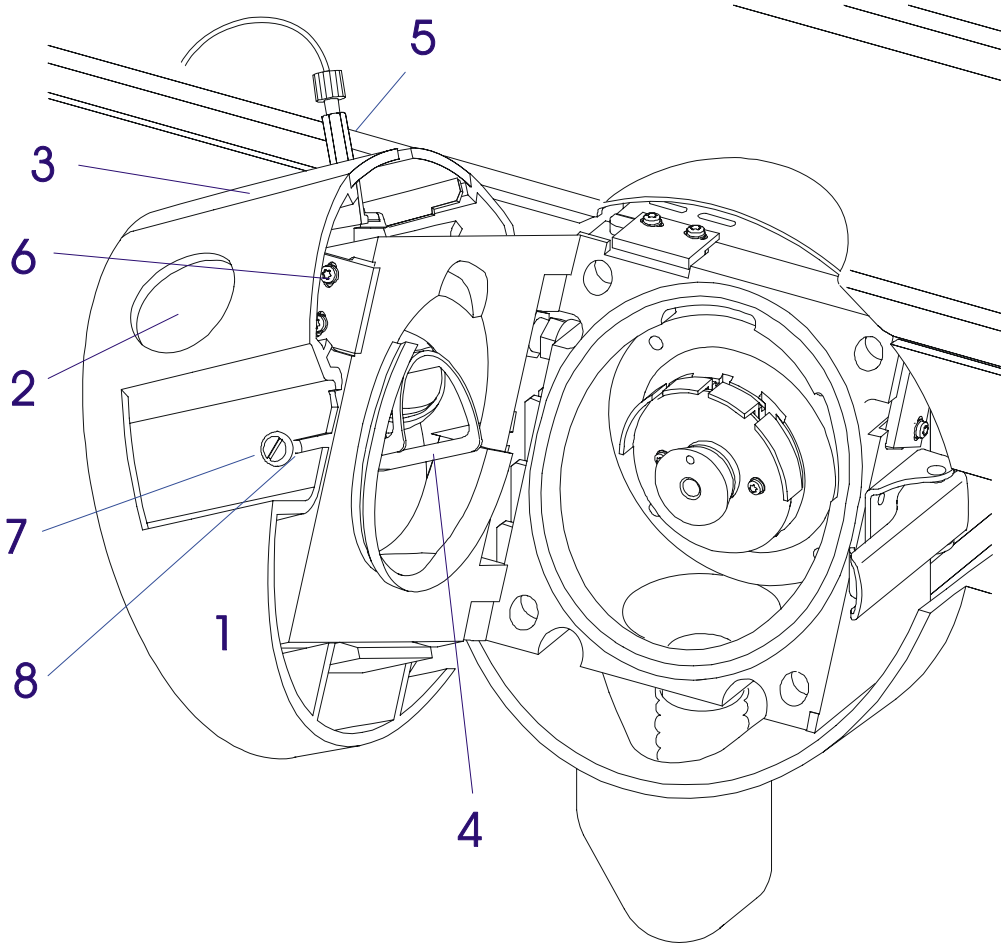

Electrospray Spray Chamber

Item	Description	Part Number
	Electrospray Nebulizer	**G1946-60098**
1	Union, zero dead volume	0100-1619
2	ES needle replacement kit	G2427A
3	Ferrule, 0.010	G1946-20213
4	ES needle[1]	G1946-20177
5	Needle holder	G1946-20174
6	Hex nut	2740-0001
7	Curved spring washer	3050-1167
8	Screw, M2 x 0.4	0515-1602
9	Square Nut	G1946-20175
10	O-ring retainer	G1946-20202
11	O-ring, 2-005	0905-1626
12	ES nebulizer body[2]	
13	O-ring, 2-009	0905-1022

[1] For CE use; customers should order G2427A.
[2] Cannot be ordered separately, order complete ES nebulizer assembly

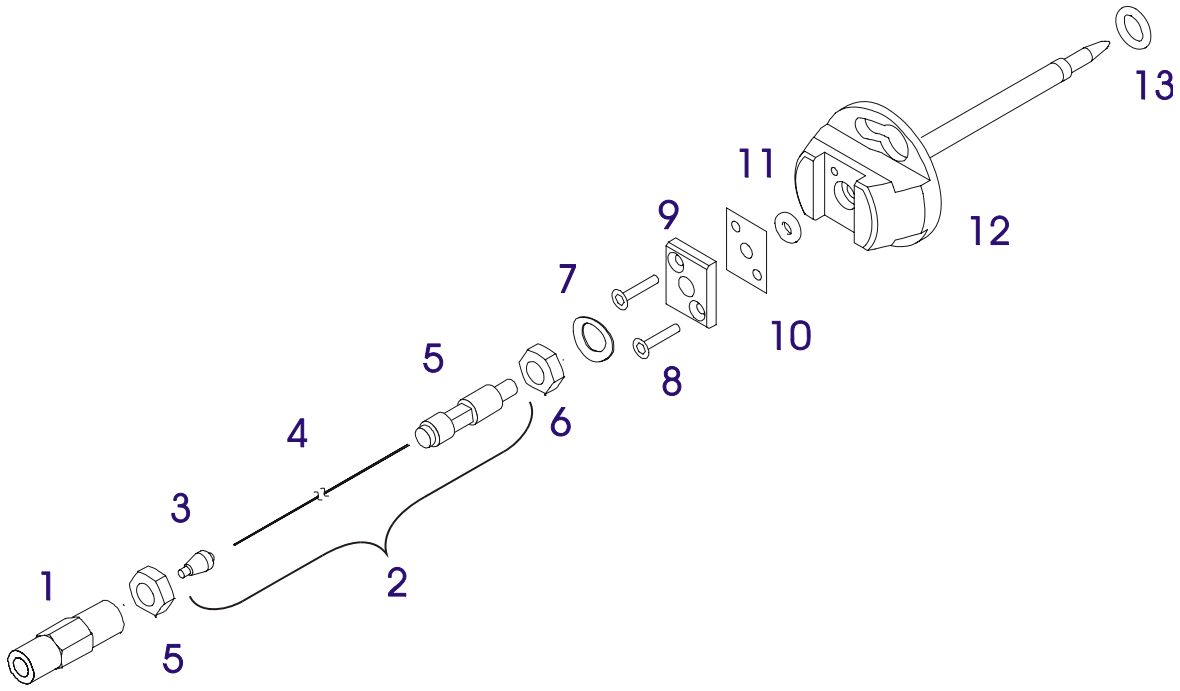

Item	Description	Part Number
	APCI Spray Chamber	**G1947A**
1	Spray chamber cover	G1946-20185
2	Spray chamber window	G1946-20159
3	Nebulizer cover	G1946-40035
4	Corona needle (each)	G1947-20029
5	APCI Nebulizer assembly	G1946-60037
6	Screw, M3 x 0.5 x 8 T10	0515-0372
	Magnet, actuator	0490-2320
7	Latch post	G1946-20196
8	Screw to hold latch post	0515-1034
9	Spray shield	G1946-20157
10	Capillary cap (spring not included)	G1946-20056 (G1946A/B/C) G1946-20301 (G1946D,G1956A/B)
11	Spring, canted coil (for capillary cap)	1460-2571
12	Capillary, glass VL Capillary, glass SL	G1946-80009 (G1946A/B/C,G1956A) 59987-20040 (G1946D,G1956B)
	Corona needle receptacle / cable assembly	G1947-60102
	Corona needle holder	G1947-60103
	Contact Spring (BeCu) Locking Spring (Stainless)	1460-2717 1460-2716
	Vaporizer Assembly, complete	G1947-60021
	Vaporizer heater/sensor/cable	G1947-60101
	Screw, M4 x 0.7 PH	0515-0380
	Screw, M4 x 0.7 x 12	0515-2556
	Screw, M3 x 0.5 FH	0515-1103
	Shoulder screw, metric (to attach APCI nebulizer)	0515-2880
	Vaporizer O-ring	0905-1292
	Vaporizer tube	G1947-20021
	Insulator, vaporizer top	G1947-20023
	Insulator, APCI nebulizer	G1947-20035
	Insulator, vaporizer tube	G1947-20042
	Spray chamber window gasket	G1946-20189
	Spray chamber window clamp	G1946-20188
	Spray chamber body, teflon coated, APCI	G1947-20242
	O-ring, spray chamber	0905-1464

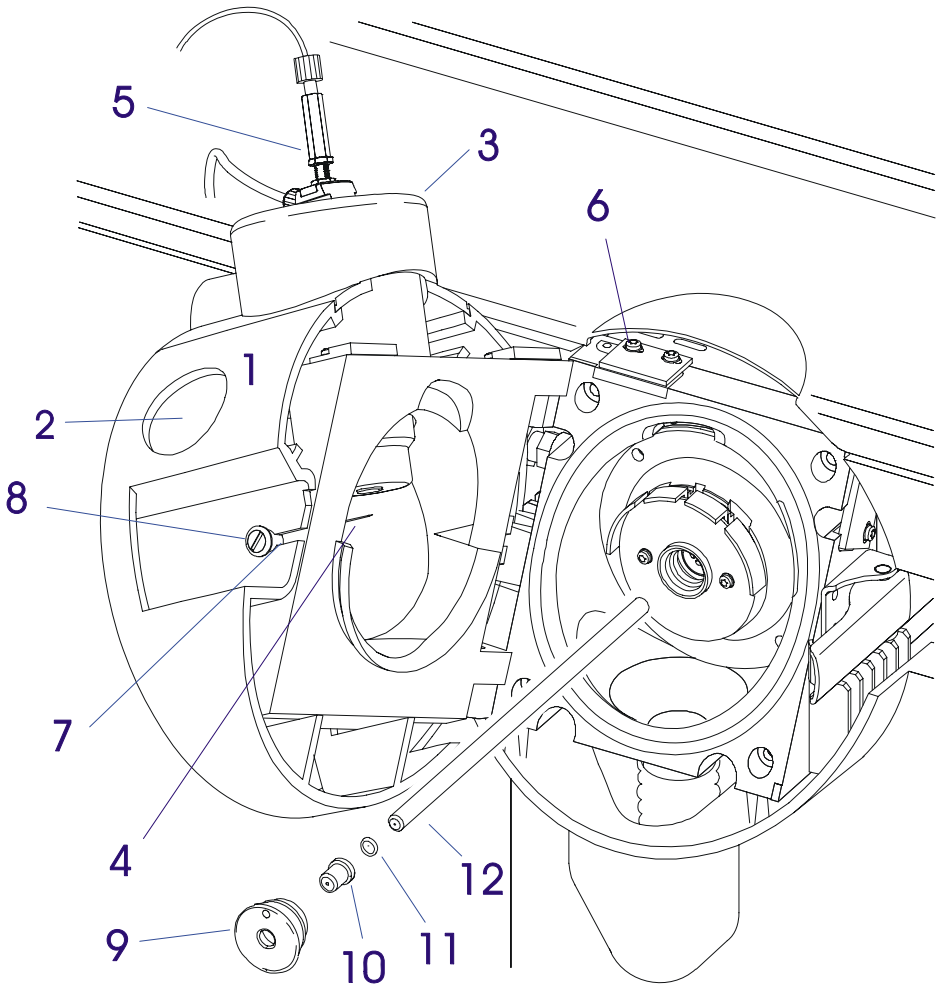

APCI Spray Chamber

Item	Description	Part Number
	APCI Nebulizer	**G1946-60037**
1	Union, zero dead volume	0100-1619
2	APCI needle replacement kit	G2428A
3	Ferrule, 0.010	G1946-20213
4	APCI needle[1]	G1946-20097
5	Needle holder	G1946-20174
6	Hex nut	2740-0001
7	Curved spring washer	3050-1167
8	Screw, M2 x 0.4	0515-1602
9	Square Nut	G1946-20175
10	O-ring retainer	G1946-20202
11	O-ring, 2-005	0905-1626
12	APCI nebulizer body[2]	
13	O-ring, 2-009	0905-1022

[1] For CE use; customers should order APCI needle replacement kit G2428A.
[2] Cannot be ordered separately, order complete APCI nebulizer

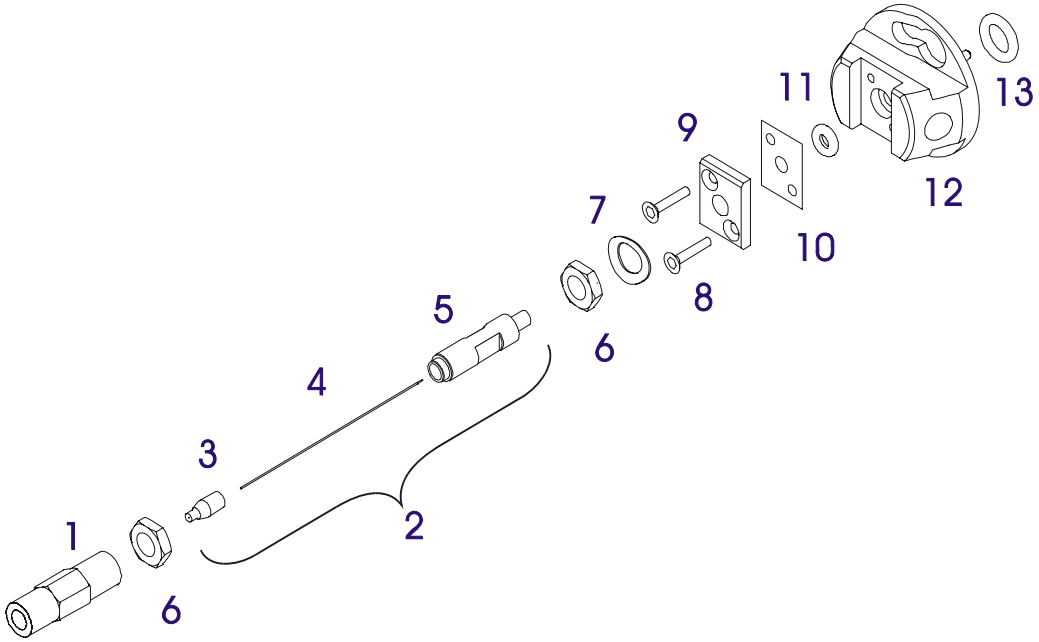

APCI Nebulizer

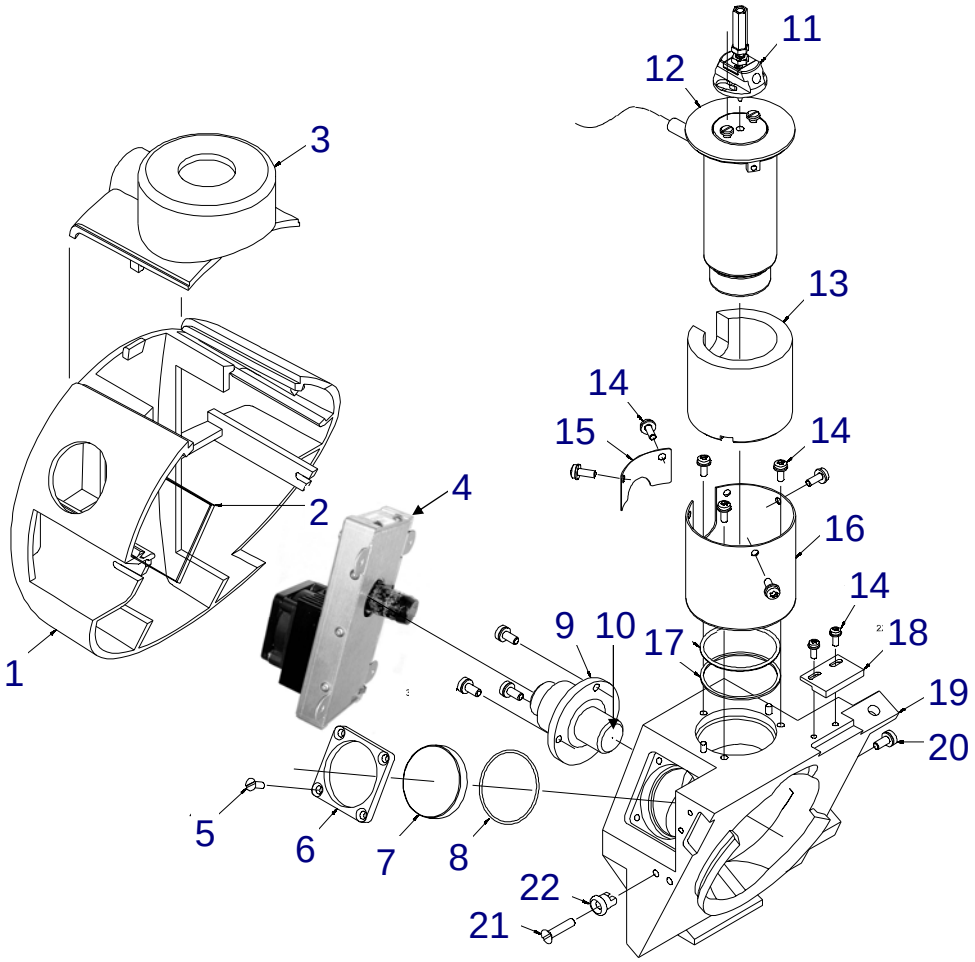

APPI Spray Chamber

APPI Power Supply & Power Cord (U.S. shown)

Item	Description	Part Number
	APPI Spray Chamber (Complete)	**G1971A**
1	Spray chamber cover	G1975-20185
2	Spray chamber cover window	G1946-20195
3	Nebulizer cover	G1946-40035
4	APPI Lamp Drive Module	G1971-60023
5	Screw, M4 x 0.7 x 12	0515-2556
6	Spray chamber window clamp	G1946-20188
7	Spray chamber window	G1946-20159
8	Spray chamber window gasket	G1946-20189
9	Lamp Holder	NPN
10	APPI Krypton Lamp	G1971-60025
11	APCI Nebulizer	G1946-60037
12	Vaporizer Assembly, complete	G1947-60021
13	Vaporizer Mount Insulation	G1947-20039
14	Screw, M3 x 0.5 x 8 T10	0515-0372
15	Shield, Vaporizer Mount	G1947-20040
16	Vaporizer Mount	G1947-20031
17	Vaporizer O-ring	0905-1292
18	Magnet, actuator	0490-2320
19	Spray chamber body, teflon coated, APCI	G1947-20242
20	Screw, M4 x 0.7 PH	0515-0380
21	Screw to hold latch post	0515-1034
22	Latch post	G1946-20196
Not Shown	Corona Interlock Defeat Connector	G1971-60022
Not Shown	LC/MSD Trap Internal APPI Cable	G2440-60083

	APPI Power Supply	**G1971-60024**
	Power Cord, U.S.	8120-1378
	Power Cord, Europe	8120-1689
	Power Cord, Japan	8120-4753
	Power Cord, Australia/New Zealand	8120-1369
	Power Cord, Switzerland	8120-2104
	Power Cord, DK/Greenland	8120-3997
	Power Cord, India/S. Africa	8120-4211
	Power Cord, Israel	8120-5182
	Power Cord, Argentina	8120-6869
	Power Cord, Chile	8120-6978
	Power Cord, China	8120-8376
	Power Cord, Great Britain/HK/SG/Maylasia	8120-8705

Analyzer Overview

Item	Description	Part Number
1	Desolvation assembly – G1946C/D, G1956A/B	G1946-60336
1	Desolvation assembly – G1946A/B	G1946-60036
2	Octopole / ion optics assembly	G1946-60041 (G1946A/B/C) G1946-60341 (G1946D) G1956-60041 (G1956A) G1956-60341 (G1956B)
3	Mass filter assembly, SQ3000	G1946-60159
4	Detector assembly	G1946-80019 (G1946A/B/C/D) G1956-80000 (G1956A/B)
5	Electron multiplier horn	05971-80103
6	Detector lead kit	G1946-60134 *

Items marked with a (*) are not identified on the diagram.

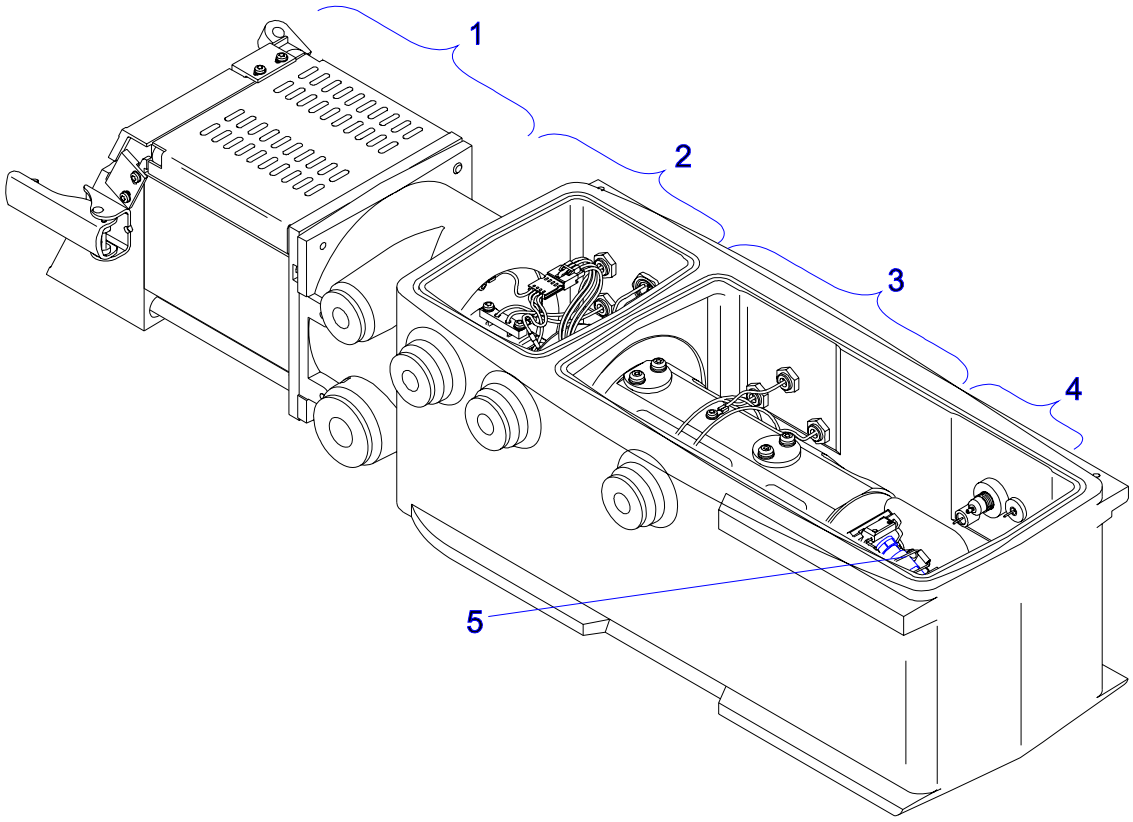

LC/MSD Analyzer

Item	Desolvation Assembly Description	G1946-60036/ -60336 Part Number
12	Alignment Washer	G1946-20115
14	Baffle Tube	G1946-20183
28	Bal seal, 0.375” (required when replacing spray chamber mount)	0905-1476
29	Bal seal, 0.625” (between Capillary Mount & Sleeve)	0905-1474
35	Bal seal, ¼” (rear capillary seal)	0905-1473
25	Capillary (G1946A/B/C, G1956A, 0.5mmID) Capillary (G1946D, G1956B, 0.6 mmID)	G1946-80009 59987-20040
4	Capillary cap (G1946A/B/C)	G1946-20056
4	Capillary cap (G1946D, G1956A/B)	G1946-20301
15	Capillary Exit Spacer	G1946-20127
17	Capillary Mount Sleeve, Teflon	G1946-20151
16	Capillary Mount, Teflon	G1946-20150
37	Clamp Ring	G1946-20184
1	Connector, male ¼” (required when replacing spray chamber mount)	0100-0115
31	Connector, male 3/16” (required when replacing spray chamber mount)	0100-1916
22	Contact ring (capillary high voltage, front & rear)	G1946-20100
21	Desolvation Assy. H.V. cable assembly (Internal)	G1946-60089
24	Desolvation cable assy. (Drying gas heater/sensor)	G1946-60047 (Repl. By G2440-60044)
23	Drying gas heater weldmet	G1946-60046
19	End plate (H.V. surface in spray chamber)	G1946-20156
5	End plate mount, Teflon	G1946-20101
30	Hex standoff for Drying gas heater/sensor cable	0380-1858
33	Insulation, Drying Gas Heater	G1946-20191
N/A	O-ring, spray chamber (teflon encapsulated)	0905-1464
7	Rear bulkhead assembly, G1946D	G1946-60186
41	Screw, M3 x 12 mm Pan torx T10 (for fragmentor contact holder)	0515-0664C
2	Screw, M3 x 8 mm Pan torx T10 (for heater weldmet assy)	0515-0372
3	Screw, M4 x 0.7 PH, for spray chamber latch	0515-0380
18	Spray chamber mount, Teflon coated	G1946-20243
20	Spray shield (hole positioned at 12 o’clock)	G1946-20157
36	Spring, canted coil (for capillary cap)	1460-2571
9	“T” Nut (H.V. contact pin)	G1946-20111
N/A	Teflon tape (required when replacing spray chamber mount)	0460-2477

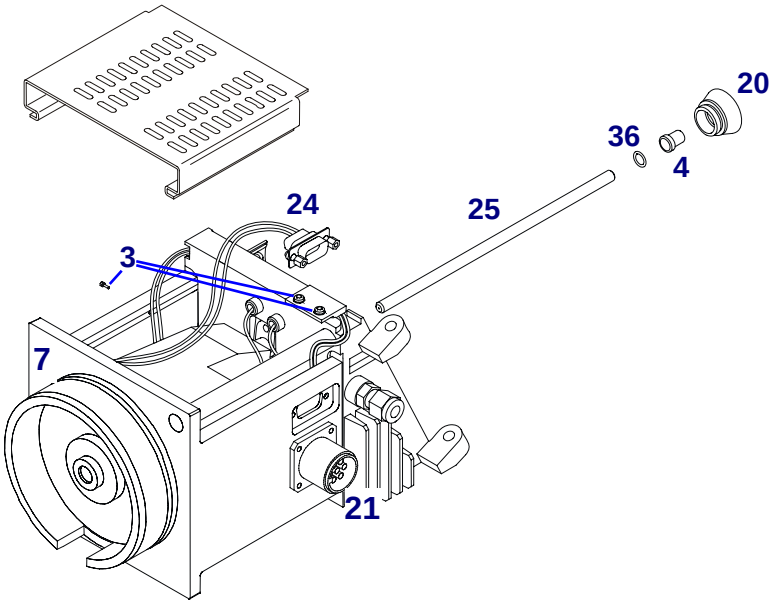

Desolvation Assy.
G1946-60336 'G1946C/D,G1956A/B'
G1946-60036 'G1946A/B'

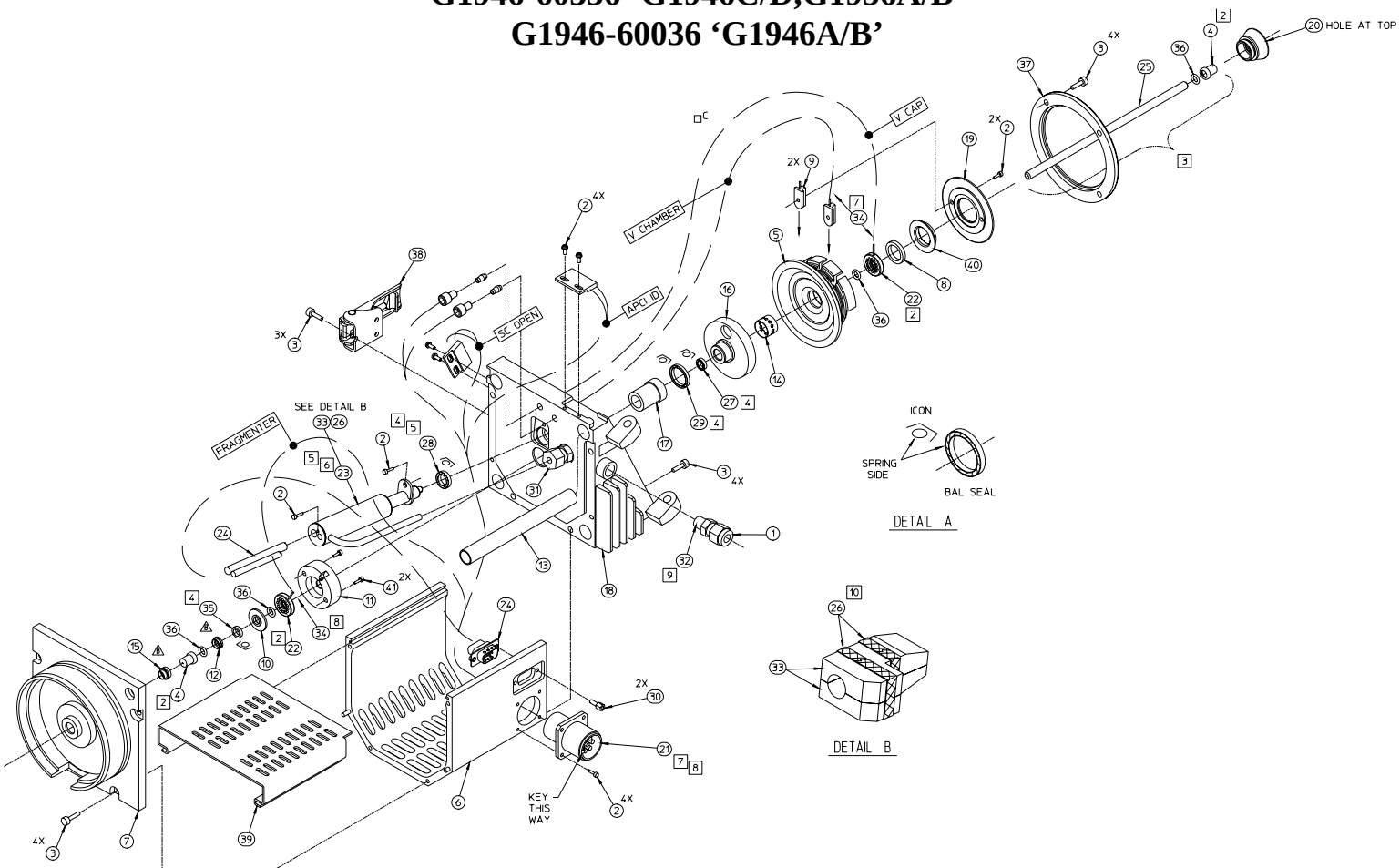

Desolvation Assy.
Exploded View

Ion Optics and Octopole Assembly **G1946-60041 (G1946A/B/C)**
G1946-60341 (G1946D)
G1956-60041 (G1956A)
G1956-60341 (G1956B)

Item	Description	Part Number
1	Screw, M3 x 0.5 x 8 T10	0515-0372
2	Screw, pin	G1946-20211
3	Octopole cable	G1946-60080
4	O-ring, 2-033, between Stage 1 and Stage 2	0905-1471
5	Skimmer 1	G1946-20089 (G1946A/B/C) G1946-20302 (G1946D) G1956-20302 (G1956A/B)
6	Strain relief block	G1946-20172
7	Skimmer spacer	G1946-20094 (G1946A/B/C) G1946-20303 (G1946D) G1956-20094 (G1956A) G1956-20303 (G1956B)
8	Lens 2	G1946-20030
9	Skimmer 2 (for G1946A/B/C, G1956A only)	G1946-20087
	Lens spacer, vespel	G1946-20143
	Lens 1	G1946-20029
	O-ring Stage 2 / Stage 3 (at top of skimmer spacer)	0905-1468

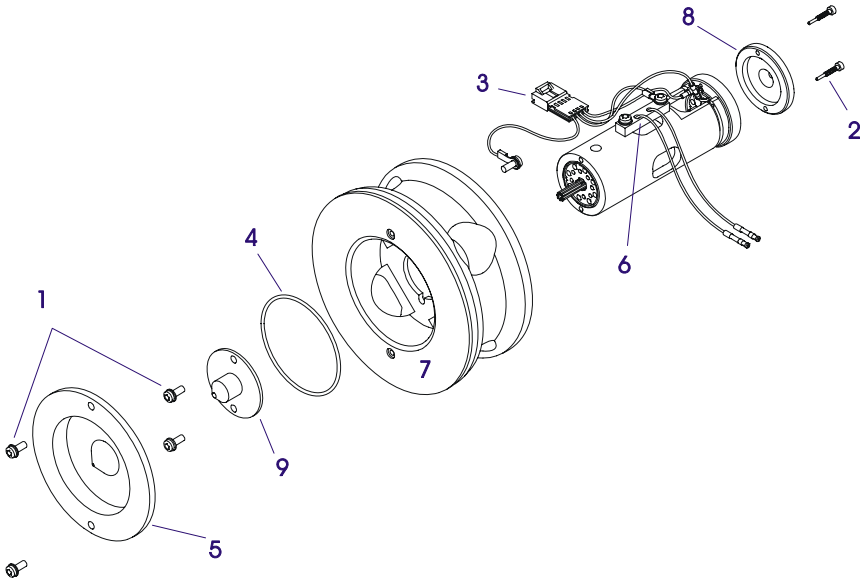

Ion Optics Assembly (G1946A/B/C)

Item	Mass Filter Description	Part Number
1	Quad grounding cable	G1946-60091
2	Quad tube support	G1946-20034
	Screw, hex socket, attaches quad tube support to manifold	0515-2539
3	Quad temperature sensor	G1946-60132
4	Base washer	G1946-20043
5	Screw, M3 x .5 x 20 T10	0515-1410
6	Screw, M3 x .5 x 8 T10	0515-0372
7	Quad heater assembly	G1946-60099
8	Screw, M4 x 10 T10	0515-0380
9	Quad bridge, downstream (“Original” & “Slim Ring” moly quad)	G1946-60095
10	Quad bridge, upstream (“Original” moly quad; US72699999 & lower)	G1946-60096
10	Quad bridge, upstream (“Slim Ring” moly quad; US72700000 & higher)	G1946-60142
10	Quad bridge, front (SQ 1500 or 3000 quad)	G1946-65003
10	Quad bridge attachement screw	0515-0658
10	Quad bridge, rear (SQ 1500 or 3000 quad)	G1946-65004
	Replacement quadrupole assy, SQ3000	G1946-60159
	O-ring, quad support (inner)	0905-1478
	O-ring, quad support (outer)	0905-1470
	Lens holder, moly quad	G1946-20148
	Lens holder, SQ3000 quad	G1946-20259

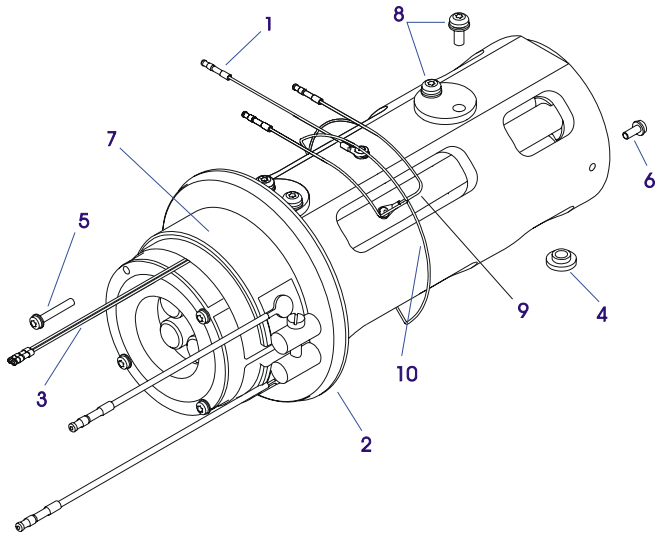

Mass Filter Assembly

Vacuum System

Item	Description	Part Number
1	KF25 clamp	0100-0549
	KF25 coseal	0100-1597
2	KF16/10 clamp	0100-1397
	NW 10/16 Trapped O-Ring	0905-1463
3	KF16 blank flange	0100-1691
4	KF25 black coupling (rubber coupling)	0100-1692
5	Dual KF16 elbow	0100-1687
6	Tubing assembly, Turbo 2 outlet	G1946-60130
9	Stage 1 plumbing weldment	G1946-20158
10	Foreline hose assembly	G1946-60032
	Foreline hose assy, Stainless steel	~~G2440-20070~~ G1969-20213
11	Flexible metal hose	0890-1841
12	Turbo pump, left (Turbo 1), 250 l/sec (G1946A models) Turbo pump, 255 l/sec (shipped on G1946B/C/D models, is also backwards compatible with the G1946A)	G1946-89001 G2589-89062
	ISO 100 Trapped O-ring (seal between turbo & manifold)	0100-1879
13	Turbo pump, right (Turbo 2), 70 l/sec	G1946-89002
	ISO 63 Trapped O-ring (seal between turbo & manifold)	0100-2002
	Split Flow Turbo, G1956A/B	G1969-80010
14	Turbo pump heat sink	G1946-20149
	Screw M5 x 25-mm, T25. Attaches heat sink to turbo 1	0515-2009
	Bolt, turbo pump, M8x25Lg, Hex head (4 ea for turbo 1 & 2)	0515-0963
15	Foreline gauge, LON	G1946-80004
16	Triode (high-vacuum) gauge, LON	G1946-80005
17	Turbo pump fan	G1946-80027
18	Turbo controller, left (EXDC 160)	G1956-80160
19	Turbo controller, right (EXDC 80)	G1946-80035
20	Turbo/LON interface assy (box)	G1956-80007
21	LON cable kit	G1946-60065
22	LON interface board	G1946-60013
23	Turbo power supply	G2589-80063
	Hose clamp	1400-1234
	Screw M4 x 0.7	0515-0383
	Screw M5 x .8 x 12 T25	0515-0387
	Screw M8 x 1.25 x 25 hex	0515-2540
	Nut, M10 x 1.5	0535-0047

	Heat sink compound, between turbo #1 and turbo #1 heat sink	6040-0239
	NW16 external centering ring	0100-1688
	Al Purge Port Plug kit, contains one Al plug and one o-ring	0100-2328

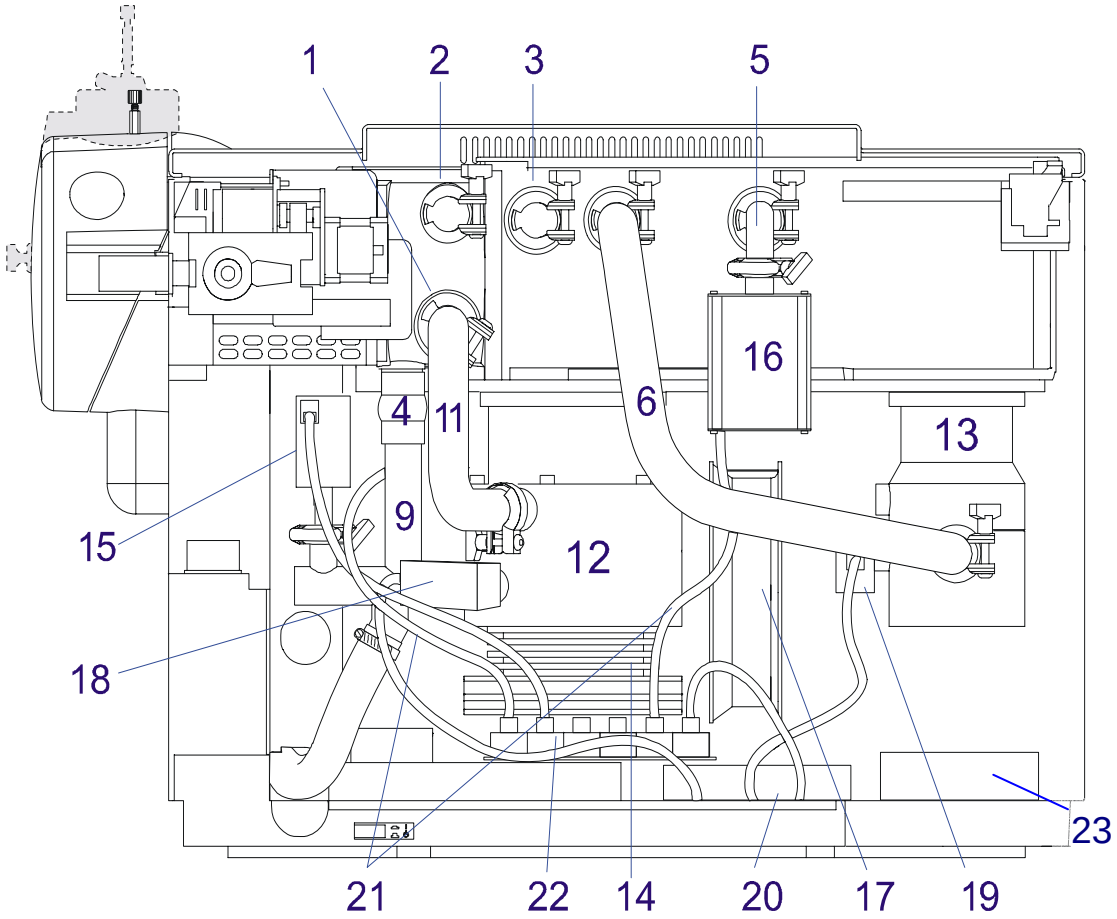

LC/MSD Vacuum System

Vacuum Chamber and Feedthroughs

Item	Description	Part Number
1	Vacuum manifold, with helicoils, G1946A/B/C/D	G1946-20050
1	Vacuum manifold, with helicoils, for older G1956A/B without cutouts in tub and coil box	G1946-20341
1	Vacuum manifold, with helicoils, for newer G1956A/B with cutouts in tub and coil box	G1946-20342
2	Feedthrough, 15 KV, for Quad and Octopole voltages (includes 0905-0490 o-ring and 2950-0144 backing nut)	G1946-80013
3	Low voltage lens feedthrough / cable (includes o-ring and backing nut)	G1946-60070
4	SMB feedthrough, for Iris voltage	G1946-80031
	O-ring, for Iris feedthrough, 0.364” ID	0905-0086*
	Nut, hex, for Iris feedthrough	0535-0047*
5	Midgi (CDEM voltage) feedthrough (includes o-ring and backing nut)	0905-1477
7	HED feedthrough	G1099-80012
	O-ring, for HED feedthrough	0905-0490*
	Nut, 11/16-inch hex, for HED feedthrough	G1946-20173*
9	Signal amp feedthrough	G1946-80030
	Signal amp FT O-ring	0905-0849*
	Signal amp FT nut	G1946-20179*
	Signal amp FT insulator	G1946-20180*
	Signal amp FT shield	G1946-20181*
14	Left vacuum chamber O-ring	0905-1466
15	Right vacuum chamber O-ring	0905-1469
16	O-ring, ATM / Stage 1 and Stage 1 / Stage 2	0905-1467
17	Vacuum chamber cover	~~G1946-20036~~ (obs.) G1946-20352 (new, does not have groove for RF spring gasket)
18	EMI gasket for chamber cover (copper spring)	~~3050-1939~~ (obs., order G1946-20352)
19	Thumbscrew for chamber cover*	0515-2887*

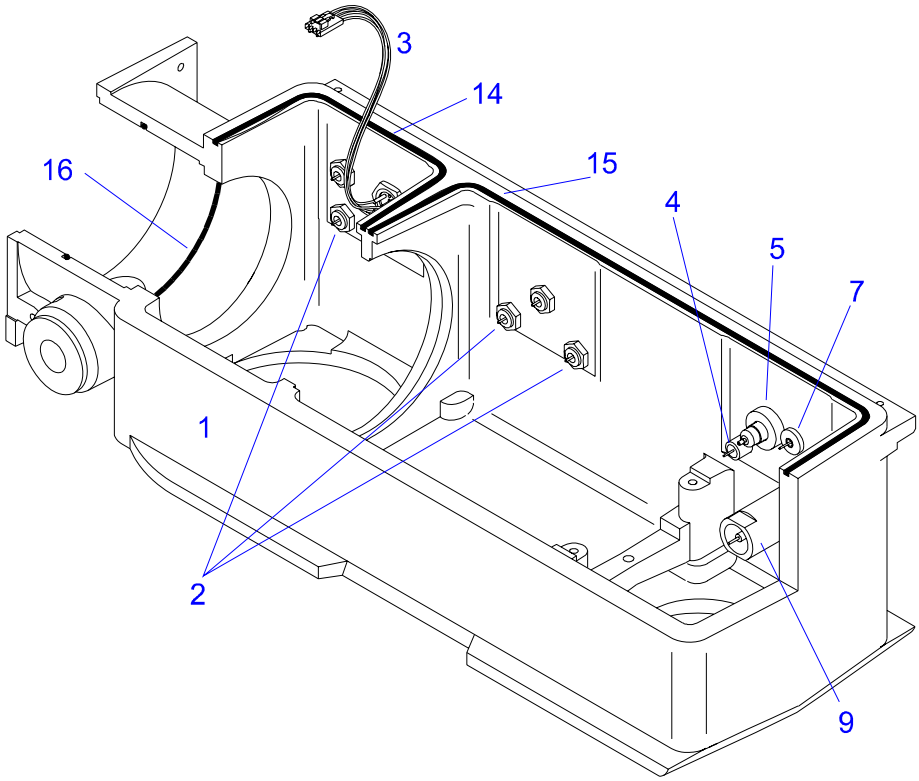

Vacuum Chamber and Feedthroughs

Foreline Pump

Item	Description	Part Number
	Foreline pump, 208V (200 to 220VAC); 50/60 Hz	G1946-89006
	Foreline pump, 230V (220 to 264VAC); 50/60 Hz	G1946-89041
2	Foreline exhaust adapter	59980-20134
3	Hose clamp	1400-0563
4	Oil mist filter	3162-1056
	Oil mist filter element	1535-4970
5	Oil return line	3162-1057
6	KF25 clamp	0100-0549
6	KF25 coseal (inside clamp)	0100-1597
7	Exhaust tubing, ½” id x ¾” od (per cm) (pre-cut)	0890-1727 (by cm) G1946-80077
8	Foreline hose assembly, Tygon	G1946-60032
	Foreline hose assy, Stainless steel	~~G2440-20070~~ G1969-20213
9	Pump oil drip pan	G1946-00034
	Rough pump oil, Inland 45	6040-0834

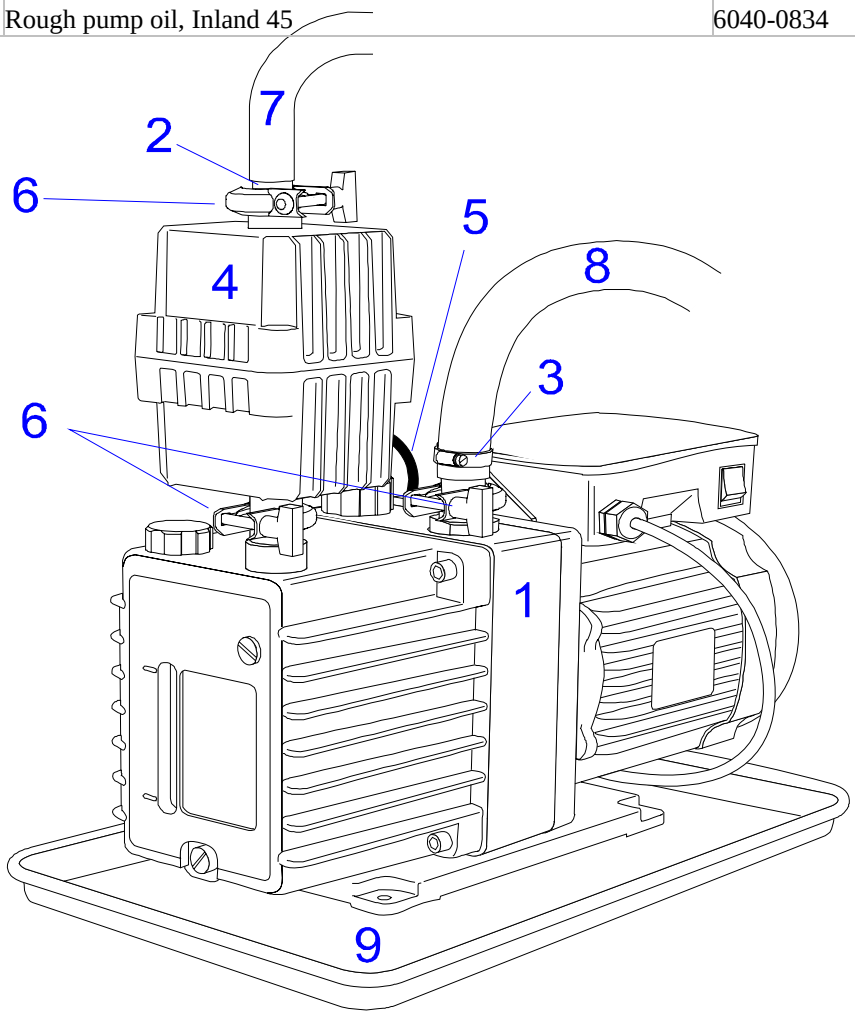

Sample Introduction System

Item	Description	Part Number
1	Manual injection valve (optional Rheodyne 7725)	0101-0941
	Rotor seal for manual valve, Vespel	0101-0623
2	4-way selection valve	0101-0920
	Rotor seal for selection valve, Vespel	0100-1855
	Rotor seal for selection valve, Tefzel (for high pH)	0100-1854
3	Selection valve bracket	G1946-00022
4	Inlet filter assembly	G1946-60180
	Filter element, 5 µm	0100-2051
	Distributor disk (2 required)	0100-2050
	Adapter tip, Valco	0100-2049
	Prefilter housing	~~G1946-20254~~ (obsolete—order G1946-60180 Inlet Filter Assy.)
4	Valco ZDV union	0100-1619
	Screw, M4 x 6 (to hold inlet union in bracket)	0515-0390

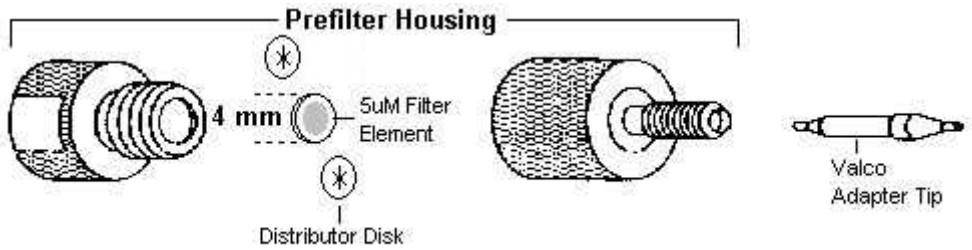

Inlet Filter Assembly

	Calibrant delivery system (CDS), complete	G1946-65148
5	Leak sensor, short (leak sensor)	G1946-60140
6	Leak sensor, long (reference sensor)	G1946-60139
7	CDS valves	G1946-60194
8	CDS Tee	G1946-20237
9	CDS solvent tubing	G1946-60084
10	CDS purge tubing	G1946-60083
11	CDS bottle cap assembly	G1946-60076
	CDS control PCA, 4-valve	G1946-60015
	CDS bottle	9300-2576
	Label, ESI calibrant	5040-9556
	Label, APCI calibrant	5040-9557
	CDS pressure regulator	0101-0752
12	Sample loop, 5 µL	G1946-60114
13	PEEK tubing, CDS to selection valve, 400mm x 0.005” ID	G1946-60154
14	PEEK tubing, Selection valve to nebulizer, 400mm x 0.005” ID	G1946-60155
	PEEK tubing, Inlet fitting to Selection valve	G1946-60192
	CDS waste tubing (teflon)	G1946-60152
	Manual valve tubing, PEEK, 140mm x 0.005” ID	G1946-60153
	Manual valve fittings kit	G1946-60105
	Nut, medium, 1/16-inch	0100-0968
	Nut, short, 1/16-inch	0100-1913
	Ferrule, 1/16-inch (CDS waste)	0100-1512
	Fitting, ferrule (CDS PEEK)	0100-1690
	Cross Fitting, ¼-inch (LC/MSD waste tubing)	0101-0950
	Hose Fitting, ¼-inch (LC/MSD waste tubing) (old)	0101-0952
	Tubing, Flex ¼-inch id (LC/MSD waste tubing) (old)	0890-1711
	PEEK tubing assembly (LC/MSD waste tubing)	G1946-60153
	Waste line assembly, 1/8" (LC/MSD waste tubing) (new)	G1946-60152
	Waste tee holder	G1946-00030
	Hose Extension Kit LC/MSD source exhaust	G1946-67002
	Ferrule, 1/16-inch for both types of valve nuts	0100-1912
	Gas line, CDS and nebulizer	G1946-60110

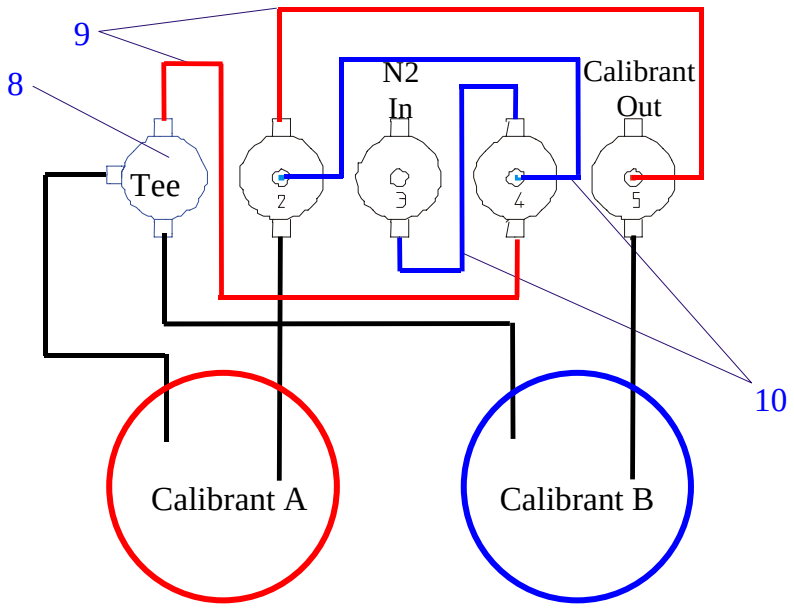

4-Valve Calibrant System (Flow Diagram)

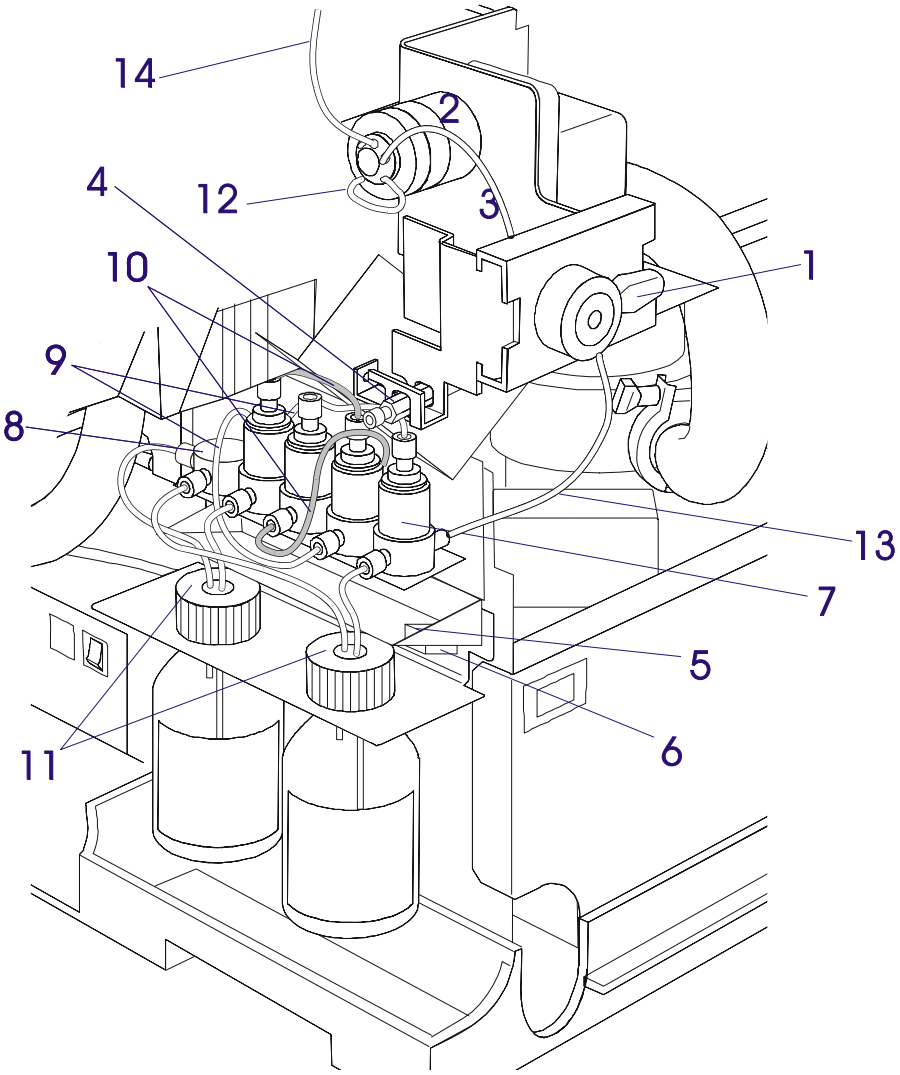

Sample Introduction System

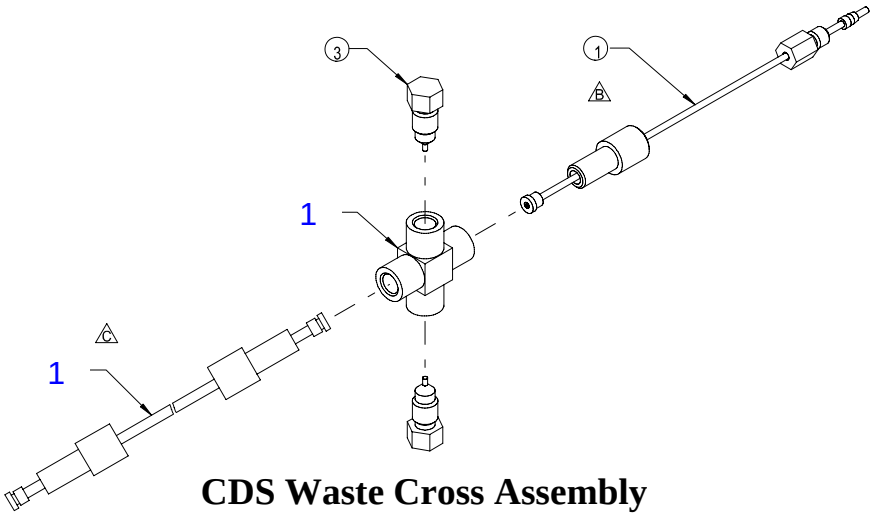

CDS Waste Cross Assembly

Gas Flow Control Module

Item #	Description	Part Number
	CDS Pressure regulator	0101-0752
	Screw, torx M3 x 30	0515-1349
	Screw M3 x 0.5, 20 mm	0515-1410
	O-ring, 2-006 V89	0905-1472
	Swage nut, ¼-inch	5180-4105
	¼-inch ferrule, front	5180-4111
	¼-inch ferrule, rear	5180-4117
	15 psi pressure relief valve	0101-0939
	100 psi pressure relief valve	0101-0940
	N2 Gas Conditioner	BHT-4
	Gas flow module + Flow module cable	G1956-60500 + G1956-60200

New Gas Flow Control Module Assembly
(P/N G1956-60500 + G1956-60200)

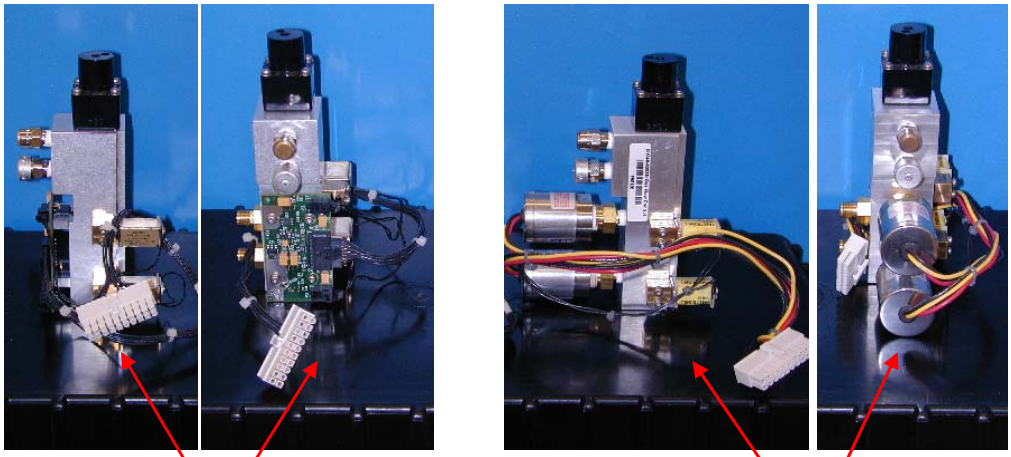

New Gas Flow Control Module Without Cable (P/N G1956-60500)

Flow Module Cable (P/N G1956-60200)

Old Gas Flow Control Module Assembly (P/N G1946-65038). The pressure sensors have become obsolete.

Flow Control Module

External Connectors and Fittings

Item	Description	Part Number
1	Teflon tubing, ¼-inch	0890-1793
2	PEEK tubing, 1/16-inch od (0.005-inch id), 1.5M	0890-1915
3	Source drain hose, 6 ft	0890-1962
4	Teflon tubing, ¼-inch (CDS & inlet module waste)	0890-1711
5	Fitting, finger tight PEEK	0100-1516
6	Foreline hose assembly, Tygon	G1946-60032
	Foreline hose assy, Stainless steel	G2440-20070
7	Gas line, CDS and nebulizer	G1946-60110
8	Inlet filter assembly, 5 um	G1946-60180
8, 9	Zero dead volume union	0100-1619
10	Remote control cable	~~05989-60080~~ G1530-60930
11	LAN cable, shielded	8121-0008
12	Drying gas heater cable	G1946-60062
13	CDS cable	G1946-60057
14	LON cable kit	G1946-60065 (G1946A/B/C/D) G1956-60065 (G1956A/B)
15	Desolvation Assy. H.V. cable (External) - See p. 24	G1946-60035
Not Shown	Desolvation Assy. H.V. cable (Internal) - See p. 11	G1946-60089
16	APCI heater and cable	G1946-60063
17	APCI needle receptacle and cable	G1947-60101
18	Line power cord:	
	US/Canada	8120-8623
	European	8120-8621
	UK/HK/Singapore	8120-8620
	Australia	8120-8619
	Switserland/Denmark	8120-8622
	China	8121-0070
	Japan	8120-6903
	India/S.Africa	8121-0710
	Israel	8121-0161
	Taiwan/Argentina	8120-6360
	Korea	8121-1222
	Thailand	8121-1301

19	Fan, electronics	G1946-80026
20	Fan, power supply	G1946-80025

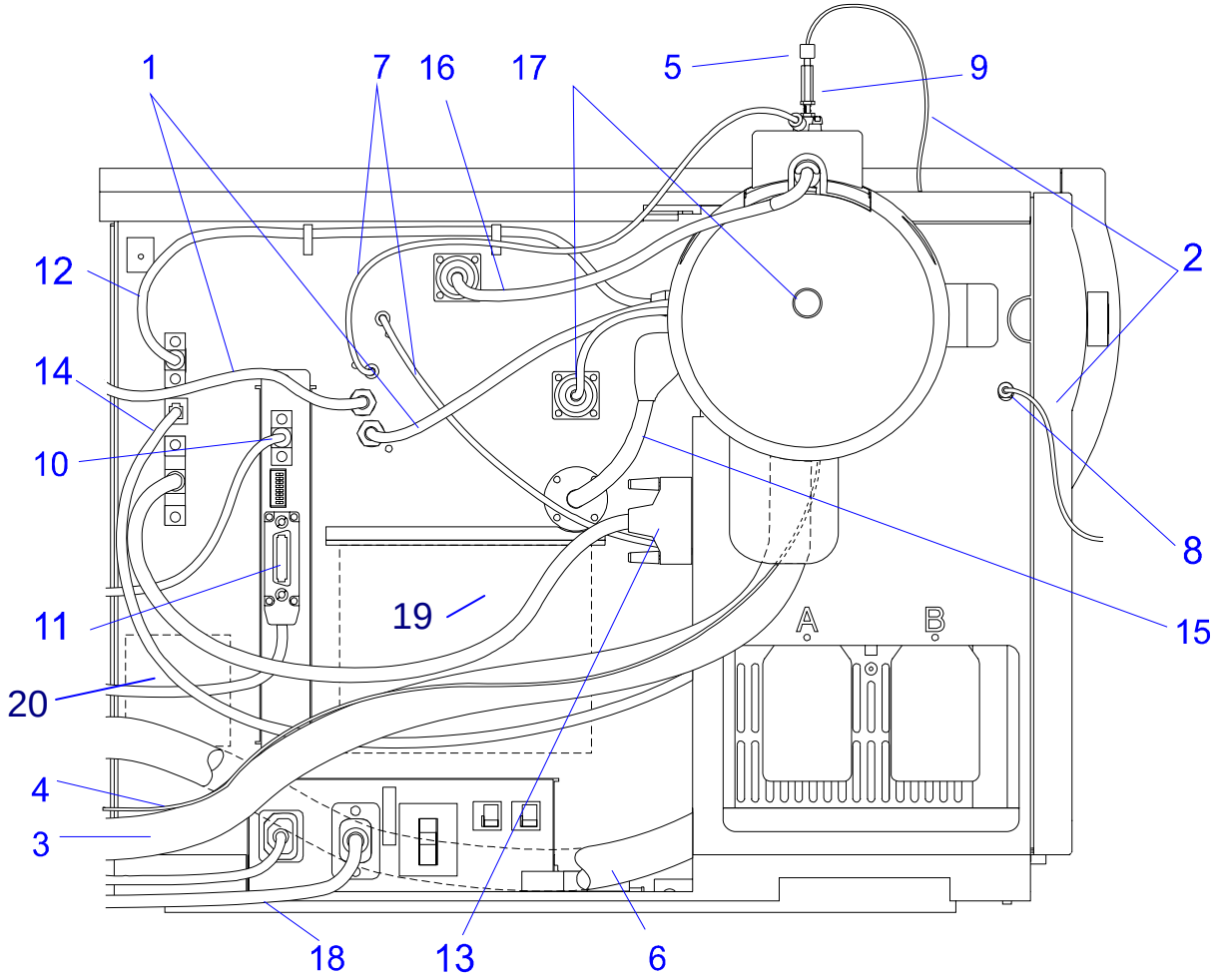

External Connectors and Fittings

Covers

Item	Description	Part Number
1	Top cover	G1946-00003
2	Right hand side panel	G1946-00004*
3	Service panel	G1946-00006
	Top electronics cover interlock switch	G1946-60133*
4	Front panel	G1946-40042 (G1946A) G1946-40041 (G1946B) G1946-40044 (G1946C) G1946-40045 (G1946D)
5	Hose hole cover	G1946-00023
6	CDS cover	G1946-40036
7	Spray chamber cover Electrospray APCI	 G1946-40033 G1946-20185
8	Nebulizer cover: Electrospray APCI	 G1946-40034 G1946-40035
9	Bottom base	G1946-40002
10	Rubber foot	G1946-20197*
11	Knob hole cover for systems without manual injection valve	G1946-40031*
	Push button, front, for light pipe	5041-8381*
	Light pipe	5041-8382*
	Coupler, light pipe	5041-8383*
	Top electronics foam	G1946-40015*
	Bracket, front cover (for side latch key)	G1946-00026*
	Latch key, front cover	5042-1302*
	Spring, front cover (for side latch key)	1460-1533*
	Screw, M3x0.5, 7mm (for front cover bracket, 2 ea)	0515-2888*
	Fastener, Snap-in Ball Stud 6-32 thread (for front cover, 2 ea)	1390-1245*

Items marked with a (*) are not identified on the diagram

Electronic Boards and Cables

Printed Circuit Boards

Analyzer 3 PCA	G1946-65250
Detector 2 PCA	G1946-65018
Log amp	G1099-65001
Power distribution gas/temp/flow PCA	G1946-65002
Fuse, 6.3A (for power distribution PCA)	2110-0715
Display PCA	G1946-60008
I/O PCA	G1946-65016
LON junction PCA	G1946-60013
Main electronics power supply	G1946-80037
Mother board	G1946-60010
SmartCard 3+ (32 MB RAM built into board;for later G1956A/B after serial number break; requires rev. LC/MSD ChemStation A.10.02 or greater; has wider face plate—see service note G1956-011)	05990-65430
Face plate	G1969-00060
SmartCard 3 (for G1946B/C/D plus early G1956A/B; has narrower face plate—see service note G1956-011)	~~05990-65420~~ (obs.) 05990-65426
32 MB DRAM SIMM (two required)	1818-6431 (1 SIMM) D4543-63001C (2 SIMMs)
Face plate	G1946-00038
Clip spring	5180-0409
Hex Standoff, 0.312in x 0.187in; 4-40-thread	0380-1858
MS interface card (SmartCard II+) – GP-IB Only	05990-65412
8 MB, 72-pin SIMM (for SC II+)	D3577-69001C or 1818-6828
Octopole 1 driver PCA (G1946A/B) Octopole 2 driver PCA (G1946A/BC/D, backwards compatible) Octopole 3 driver PCA (G1956A/B, not backwards compatible with G1946x)	~~G1946-65009~~ (obsolete) G1946-65251 G1956-65008
Spacer, black plastic (back of G1946-65251 octopole board)	0380-4754
Standoff (back of G1946-65251 octopole board)	0380-4762
HV Power supply, Vcap/Vchamb	G1946-80015 (G1946A/C, G1956A) G1946-80059 (G1946B/D, G1956B)
HV Power supply, APCI	G1946-80014 (G1946A/C, G1956A) G1946-80058 (G1946B/D, G1956B)

HED power supply	G1946-80029 (G1946A/C, G1956A) G1946-80060 (G1946B/D, G1956B)
Primary (ac) power module	G1946-65033
Main circuit breaker	3105-0172
6A Circuit breakers (AC power module)	3105-0222
RF power amplifier	G1946-65056
RF coil box, for “Original” moly quad (serial numbers US72600000 to US72699999) (G1946A)	G1946-65034
RF coil box, for “Slim Ring” moly quad (serial numbers US72700000 to US02499999) (G1946A/B/D)	G1946-65147
RF coil box, for SQ 1500 quad (for serial numbers US01900000 to US10800000) (G1946C)	G1946-65187
RF coil box, for SQ 3000 quad (for serial numbers US02500000 to US99999999 G1946D; US10800000 to US99999999 G1946C)	G1946-65609
SCIB-LON Adapter PCA	G1946-65007
Turbo power supply	G2589-80063
Heater Transformer	G1946-80038
Valve PCA, 5-valve	G1946-60012
Valve PCA, 4-valve	G1946-60015
Fan, power supply	G1946-80025
Fan, electronics	G1946-80026
Fan, turbo pumps	G1946-80027

Source & Ion Optics Cables

APCI internal HV cable	G1946-60050
APPI internal cable (LC/MSD Trap)	G2440-60083
APPI corona needle interlock defeat connector	G1971-60022
Jumper cable (for G1946D, from skimmer2 test point to dcomm test point on analyzer board)	G1946-60312
Lens cable assembly	G1946-60070
Lens2 RF cable, from Analyzer III PCA to Octopole II PCA, for G1946D/G1956B only with Len2RF enabled.	G1946-60310
Octopole cable assembly (inside vacuum manifold)	G1946-60080
Octopole control cable, ribbon, between Analyzer PCA & Octopole PCA	G1946-60049
Source cable assembly (for G1946D/G1956B, from analyzer PCA to octopole PCA)	G1946-60311
Desolvation Assy. H.V. cable (Internal) - See p. 11	G1946-60089
Desolvation Assy. H.V. cable (External) - See p. 24	G1946-60035

Control Cable, ribbon, between Analyzer PCA & VcapVcham/APCI HV power supplies	G1946-60049

Valve, Heater, LON & Display Cables

APCI heater / cable (internal)	G1946-60063
APCI needle receptacle	G1947-60102
APCI vaporizer heater/cable	G1947-60101
CDS cable	G1946-60057
Display cable, internal	G1946-60092
Display cable, external	G1946-60069
Desolvation Cable Assy. (Heater/Sensor). Internal cable assembly includes heater, sensor, and 9-pin connector.	~~G1946-60047~~ Repl. by G2440-60044
Desolvation Assy. H.V. cable (Internal). Includes: 'spray chamber open' and 'APCI source present' magnet relay switches. See p. 11	G1946-60089
Desolvation Assy. H.V. cable (External) - See p. 24	G1946-60035
Drying gas heater cable	G1946-60062
LON cable kit	G1946-60065
Quad heater cable (External)	G1946-60116

Detector Control Cables

CDEM HV output cable	G1946-60082
HED ouput cable	G1946-60173 (new/long) G1099-60431 (old/short)
HED control cable	G1946-60048
Iris cable	G1946-60086
Signal cable	G1099-60416

Quad and RF Control Cables

Quad DC driver cable	G1946-60053
RFPA BNC cable	G1946-60058
RF detector cable	G1946-60052
RFPA power cable	G1946-60060
RFPA SMB cable	G1946-60059

Other Cables

	LV primary PS cable	G1946-60068
	Remote control cable	~~05989-60080~~

		G1530-60930
	Turbo dc power cable	G1946-60108
	I/O ribbon cable	G1946-60166
3 ea	LAN cable	8121-0008
1 ea	JetDirect card (for LC)	J4100A
1 ea	LAN Switching hub	G1680-63718 (replaces J3128A #ABA hub)

	Shipping Kit, G1946B/C/D,G1956A/B	**G1946-60170**
3 ea	1 ml pipette	9301-1423
5 ea	1/4 Nut and Ferrule Set, Brass	5183-0384
2 ea	125 ml bottle, Nalgene	9301-1433
1 ea	30 ml bottle, Nalgene	9301-1347
1 ea	5 Micron Filter 316 ss & teflon	0100-2051
1 ea	50 ml volumetric flask	9301-1424
1 ea	Adapter, 1/4-28 to NPT (for G1946-60152 waste tubing)	0100-2149
1 ea	Drain bottle assembly	G1946-60111
760 cm	Exhaust tubing, ½” id x ¾” od	G1946-80077
8 ea	Fitting, finger-tight PEEK	0100-1516
1 ea	Foreline exhaust vent adapter	59980-20134
1 ea	Hook-and-loop tape (12" Velcro)	0510-1271
1 ea	Hose clamp, nylon	1400-2144
1 ea	KF25 clamp, Steel	0100-0549
1 ea	KF25 coseal, Viton	0100-1551
1 ea	Nebulizer adjustment fixture	G1946-20215
1 ea	Nebulizer Magnifier	G1946-80049
1 ea	Nitrogen gas conditioner, LC/MS	BHT-4
1 ea	Oil mist filter kit	3162-1056
1 ea	Pump oil drip pan	G1946-00034
1 ea	Remote start cable	~~05989-60080~~ G1530-60930
500 cm	Teflon tubing, 1/4	G1946-80078
1 ea	Tool Kit, LC/MSD	G1946-60157
1 ea	Tubing cutter	8710-1930
1 ea	Tubing, PEEK .005" ID (1.5 m)	0890-1915
1 ea	Vacuum pump oil	6040-0834
1 ea	Wire for cleaning capillary (500ft spool)	G1946-80054

	LC/MSD Shipping Crate	**G1946-60700**

	Supplemental Ship Kit, G1946D,G1956B	**G1946-60254**
2 ea	Screw, M3 x 0.5 (8mm long)	0515-0372
1 ea	Flask, 100 mL Volumetric	9301-1344
1 ea	Nebulizer Spacer	G1946-20307

1 ea	**Tool kit, LC/MSD**	**G1946-60157**
2 ea	Abrasive mesh, 4000 grit	8660-0827
10 ea	Cable tie, nylon	1400-0482
1 pk	Cotton swabs, 100/pk	5080-5400
1 pk	Lint-free cloths	05980-60051
1 ea	Velcro strap, 12 inches	0510-1271
1 ea	Screwdriver, Torx T-10	8710-1623
1 ea	Screwdriver, Torx T-20	8710-1615
1 ea	Wrench, 1/2-inch x 9/16	8710-0877
2 ea	Wrench, 1/4-inch x 5/16	8710-0510
1 ea	Wrench, 3 mm	8710-2699

Supplies Included with Instrument / Source

G1946C/D,G1956A/B + System Bundles

1 ea	Cartridge Hardware, Rapid Resolution (SL units only)	820222-901
1 ea	Column, Rapic Resolution, 3.5 um, 2.1x30mm (SL units only)	873700-902
3 ea	LAN cable, shielded	8121-0008
1 ea	LAN hub, 8-port	G1680-63713
1 ea	Shipping Kit, LC/MSD	G1946-60170
1 ea	Shipping Kit, G1946D (SL units only)	G1946-60254
	HPLC Flushing Solvent (500 ml) (SL units only)	G1969-85026
	Methanol, High Purity (1L) (SL units only)	8500-1867
	Water, High Purity (4L) (SL units only)	8500-2236
	Ammonium Formate, 3153 ppm in water (SL units only)	G1946-85021

G1947A APCI Source

1 ea	APCI Chemical Kit	G1947-60600
1ea	APCI/APPI Calibrant Solution (100 ml)	G2432A
1 ea	ES/APCI Performance Standard (Reserpine)	G2423A
1 ea	APCI Accessory Ship Kit	G1947-60025
1 ea	Abrasive Mesh, 4000 grit	8660-0827
1 ea	APCI Nebulizer Needle	G1946-20097
1 ea	Needle holder	G1946-20174
1 ea	Ferrule, Nebulizer Needle	G1946-20213
1 ea	Corona Needle, APCI	G1947-20029

G1948A ES Source

1 ea	ES Chemical Kit	G1946-60600
1 ea	ES Calibrant Solution (100 ml)	G2421A
1 ea	ES/APCI Performance Standard (Reserpine)	G2423A

1 ea	ES Accessory Ship Kit	G1946-60136
1 ea	Nebulizer Needle	G1946-20177
1 ea	Needle holder	G1946-20174
1 ea	Ferrule, Nebulizer Needle	G1946-20213

G1971A APPI Source

1 ea	Corna Needle Interlock Defeat Accessory	G1971-60022
1 ea	APPI Internal Cable for Trap	G2440-60083
1 ea	APPI Serial Extension Cable	G1971-60500
1 ea	APPI Software Patch, Replacement Media	G1971-60021
1 ea	APCI Chemical Kit	G1947-60600
1 ea	APCI Nebulizer Needle Kit	G1946-60190
1 ea	APCI Nebulizer Needle	G1946-20097
1 ea	Needle holder	G1946-20174
1 ea	Ferrule, Nebulizer Needle	G1946-20213

Consumables and Supplies

Chemical consumables

	APCI negative mode performance evaluation sample (for G1946A/B)	G1946-85006 (customers should order G2425A)
	Calibrant, ES	G2421-60001 (customers should order G2421A)
	Calibrant, APCI	G2422-60001 (customers should order G2432A)
	Calibrant, APCI & APPI (replaces G2422A calibrant)	G2432-60001 (customers should order G2432A)
	Delay Calibrant for Mass-Based Fraction Collection (MBFC)	G1946-85020
	ES negative mode performance evaluation sample (for G1946A/B)	G1946-85005 (customers should order G2424A)
	Multiple-charge compound performance evaluation sample (for G1946A/B)	59987-20014 (customers should order G2426A)
	OQ/PV standards kit (caffeine stds)	8500-6917
	Positive mode performance evaluation sample, Reserpine (G2423A is used for both ES and APCI)	G1946-85004 (customers should order G2423A)
	HPLC Flushing Solvent (500 ml) (SL units only)	G1969-85026
	Methanol, High Purity (1L) (SL units only)	8500-1867
	Water, High Purity (4L) (SL units only)	8500-2236
	Ammonium Formate, 3153 ppm in water (SL units only)	G1946-85021

Instrument consumables

	APCI nebulizer needle	G1946-20097 (customers should order G2428A)

Corona needle (1 ea)	G1947-20029
EM replacement horn	05971-80103
ES nebulizer needle	G1946-20177 (customers should order G2427A)
Gas conditioner, N2-specific	BHT-4
Vacuum pump oil (1 liter)	6040-0834

Tubing, column, fittings, and ferrules

Column SB-C18 Rapid Resolution	873700-902
Column Holder, Hardware Kit	820222-901
Ferrule, 1/16” for CDS waste	0100-1512
Ferrule, 1/16” for valve nuts	0100-1912
Fitting, ferrule, 1/8-inch OD	0100-1919
Fitting, finger-tight PEEK (for 1/16-inch tubing)	0100-1516
Fitting, nut 1/8-inch OD	0100-1914
Teflon tubing, 1/4-inch for N2 supply & drying gas	0890-1793 (per cm) G1946-80078 (pre-cut)
Teflon tubing, 1/8-inch OD	0890-0746
Tubing - PEEK, 0.005-inch ID, 1/16-inch OD, 1.5 M	0890-1915
Tubing, exhaust, ½” id x ¾” od	0890-1727 (per cm) G1946-80077 (pre-cut)
Tubing, Turbo 2 outlet	G1946-60130
Waste drain hose, spray chamber	0890-1962

O-rings and seals

O-ring, ISO 63 trapped (steel retaining ring)	0100-1693
O-ring 2-005	0905-1626
O-ring 2-208	0905-0849
O-ring, 2-009	0905-1022
O-ring, vaporizer	0905-1292
O-ring, spray chamber	0905-1464
O-ring, 2-160 Viton	0905-1466
O-ring, Atm / Stage 1 and Stage 1 / Stage 2	0905-1467
O-ring Stage 2 / Stage 3 (top of skimmer spacer on ion optics assy.)	0905-1468
O-ring, 2-177 Viton	0905-1469
O-ring, Stage 3 / Stage 4	0905-1470
O-ring, 2-006 Viton	0905-1472
O-ring, Viton 2-039	0905-1478

Grease, apiezon	6040-0289

Tools

1 ml pipette	9301-1423
50 ml volumetric flask	9301-1424
100 ml volumetric flask	9301-1344
Ball driver, 1.5 mm	8710-1570
EM Series Pump oil change tool	3162-0177
Pliers, needle nose	8710-0004
Safety glasses	9300-1159
Screwdriver, flat blade	8710-1029
Screwdriver, Torx T-10	8710-1623
Screwdriver, Torx T-15	8710-1622
Screwdriver, Torx T-20	8710-1615
Screwdriver, Torx T-25	8710-1617
Tool Kit, LC/MSD	G1946-60157
Tubing cutter	8710-1930
Wrench, 1/4-inch x 5/16	8710-0510
Wrench, 3/8-inch	8710-0632
Wrench, 7/16-inch x 1/2	8710-0806
Wrench, 1/2-inch x 9/16	8710-0877
Wrench, 11/16-inch x 3/4	8720-0011
Wrench, 15/16-inch	N/A
Wrench, 9/64-inch hex	8710-0060
Wrench, hex, 0.8 mm (Multiplier Resistor)	8710-1225
Wrench, 3 mm, open end	8710-2699
Wrench, 13 mm (or 1/2-inch)	8710-1574
Wrench, ratchet, 13 mm (or 1/2-inch)	N/A
Wrench, 16 mm	N/A
Wrench, 17 mm	8710-0799
Wrench, spanner	8710-1180
Wrist strap, ESD	9300-1408
LC/MSD Reference Collection CD-ROM set	~~G1946-90072~~ (discontinued)